This is the peer reviewd version of the followng article:

A design approach for overhead lines considering configurations and simulations / Cicconi, P.; Manieri, S.; Bergantino, N.; Raffaeli, R.; Germani, M.. - In: COMPUTER-AIDED DESIGN AND APPLICATIONS. - ISSN 1686-4360. - 17:4(2020), pp. 797-812. [10.14733/cadaps.2020.797-812]

Terms of use:

The terms and conditions for the reuse of this version of the manuscript are specified in the publishing policy. For all terms of use and more information see the publisher's website.

12/10/2024 04:32

(Article begins on next page)

Title:

An Information Modeling Approach for Designing Overhead Lines

Authors:
Paolo Cicconi, p.cicconi@staff.univpm.it, Università Politecnica delle Marche, Italy
Steve Manieri, s.manieri@staff.univpm.it, Università Politecnica delle Marche, Italy
Roberto Raffaeli, roberto.raffaeli@uniecampus.it, Università degli Studi eCampus, Italy
Michele Germani, m.germani@staff.univpm.it , Università Politecnica delle Marche, Italy

Keywords:
Computer-aided design; Information Modeling; Finite Element Model; Configurations; Overhead lines.

DOI: 10.14733/cadconfP.2019.xxx-yyy

Introduction:
Nowadays, the contribution of the CAD modelling is not well exploited into the design of overhead lines. Even if several sectors from mechanics [2, 3] to Architecture Engineering Constructions (AEC) [1] have been using an integrated information approach into 3D-CAD models, the design of overhead lines is still based on a 2D-CAD modelling and tools to support the pole configurations. The 3D modelling of an overhead line over a 3D terrain surface is not yet considered in this field. The configurations are related to the geometry of poles, isolators, and conductors (also known as hanging cable [9]). Even if the literature shows a relevant simulation activity about the geometrical optimization of poles [16] and lattice towers [13], these works are parameters-based without showing a CAD-based modelling approach. Some papers have also been paying attention to the cost optimization of such transmission lines [8, 15]. These works mainly concerns a parameters optimization to reduce the life cycle cost of a distribution line. However, few researchers have considered both costing and structural analysis in their works, as described in the next section.

The study on overhead lines is a recurring theme in literature. Since a 50-years return period is a common design practice for power transmission lines [7], there is a continuous demand of best design practice to improve the overall performance reducing time and cost related to the engineering design. The early studies were developed in literature in the '60 and also in the '80 [10]. Today, the research is mainly based on the cost optimization to evaluate the design of new lines or the re-design of existing ones. In fact, when a transmission line is approaching the end of the service life, the risks of its use increase [6]. Therefore, analysis about the comparison between the substitution of structural supports (lattice towers, poles, etc.), or the reinforcement of the existing one, is also present in literature.

The present paper aims at showing an information modelling approach based on a design platform which considers the CAD model as a repository of knowledge and data for the design of overhead lines. This approach considers the geometry of each supporting pole, the location area with obstacles, the analytical calculation of the loading conditions, and the interaction between 3D-CAD model and FEM simulations. The scope of this research is the integration of geometry, boundary conditions, simulations, cost and life cycle information inside a design platform for overhead lines.

Research background on overhead lines
Actually, electricity is very important for the society because it is necessary for supporting various activity. Any disruption in the distribution lines may result in large economic loss [9]. Therefore, the reliability is an important quality factor in power distribution. Smart cities, and also smart homes,

© 2019 CAD Solutions, LLC, http://www.cadconferences.com

depend on the continuous distribution of electricity [5]. Typical outage sources are related to the weather conditions such as ice, snow, wind, and storms [4]. Additional damage conditions are related to earthquake and trees falling. Even if undergrounding lines avoid a lot of disadvantages related to the reliability of power transmission, overhead lines still remain the cheap solution [5]. Therefore, the design optimization of overhead lines is a current topic in literature due to the growing interest for a reliable electricity distribution.

Early studies on the design optimization of these overhead lines started in the ’60 [10]. In the ’80, Olbrycht studied an algorithm to optimize the cost of transmission lines considering a fix number of poles to be arranged on a defined route [9]. An early CAD modelling of a transmission line was analyzed by Peyrot et al. in 1993 [11], but this approach was not extended in other research projects. They exploit the use of a GIS-type representation of the terrain as a modelling input. However, this work was mainly limited by the technology related to the tools available in the early ‘90s. For example, any FEM solver and any integration between CAD and FEM are not analyzed. Additionally, the life cycle information was not considered. In the second part of the ‘90s, a Knowledge Based System was proposed by Picard et al. to support the tower configurations and the cost per kilometer of high-voltage transmission lines [12]. However, they did not consider any simulation activity during the described design phase. More recently, in 2012, Raghavedra proposed a design optimization based on FEM simulations [13]. He used STAAD PRO-04 and ANSYS as simulation solvers. However, his work was only based on the optimization of a single tower. Therefore, he did not analyze the design optimization extended to a complete transmission line. Additionally, the 3D-CAD model representation on the transmission line is not considered.

Generally, the design of a transmission line depends on the configuration of an appropriate set of parameters and data [15]. A single parameter change, such as the conductor diameter, effects the loading conditions on the structural supports and their foundations [8]. The influence of the change propagation is an important topic in this application context. Since the construction of such lines involves heavy investment, a careful analysis needs to be carried out at the planning stage when the decision is making. In this context, Teegala et al. proposed a genetic algorithm approach for the cost assessment and optimization of overhead power transmission lines [15].

Recently, much research has been focusing on the safety optimization and cost reduction since 2014. Virtual prototyping is often used to simulate extreme loading conditions related to wind, snowing, and their combination. While some loads conditions are well described by normative, other events are still under investigation. For example, the freezing radiation fog is a new weather event in the North of France. Therefore, Dulcloux and Nygaard published in 2018 a research work to estimate the real ice loads to be considered during the design activity [4]. In the same period, Stengle and Thiele analyzed a simulation approach to investigate the loads related to a downburst wind acting on an overhead transmission line in Northern Germany [14]. All these research works highlight an increasing interest in the design of overhead lines to reduce cost and increase safety and reliability. Virtual prototyping is applied in several papers; however, the recent developments have excluded the role of the CAD-model into the design workflow. In this study, the authors want to consider a platform tool based on the 3D-CAD system to be used as an information repository and as a tool for interacting with FEM analysis.

Motivations:

The design of overhead power lines is an important task that sometime is underestimated, in particular in developed countries. In these countries, in fact, the electrification of the territory has been carried out years ago and thus there are few new design projects, while the main activity of engineers is to maintain the existing structures. For these reasons, few commercial software tools have been developed in the last years to support the design tasks in this field. On the other hand, electrification of the territory still is a primary necessity in developing countries, where new lines are being constructed every day. Furthermore, international and national standards are constantly changing and improving, and this implies that also old lines must be checked in order to verify the compliance with the new standards. The aim of the authors is to propose a specific computer-aided design process to support the new design and also the re-design of overhead lines, including information related to the life cycle.

© 2019 CAD Solutions, LLC, http://www.cadconferences.com

Main Idea:
The main idea of the paper is to automate the design of overhead lines and verification of existing lines by using a configuration tool in combination with a CAD modeler, and double checking the results obtained using a FEM tool and an analytical model. The entire process is shown in Fig.1.

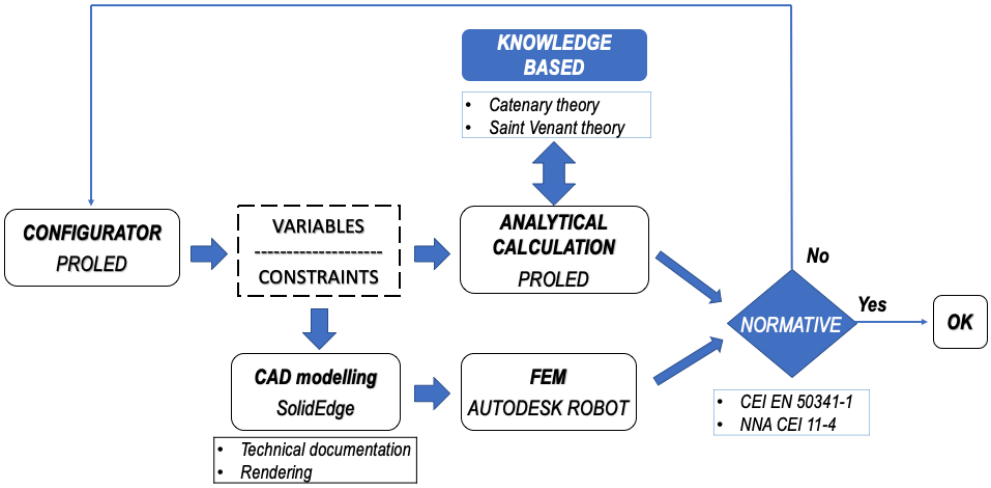

Fig. 1: Scheme of the design process.

The configurator used in the process is a commercial software named Proled. The configurator enables the user to configure a new line by selecting different types of existing supports, considering the topological characteristics of the environment such as altitude and geographic position.
The design of overhead lines is regulated by normative; in particular, in Italy the main standards are CEI EN 50341-1 (European) and NNA CEI 11-4 (National). For each configuration, the normative provide a procedure to calculate the loading conditions to be used for the structural analysis, and the constraints to be satisfied. In particular, the main loads are shown in Tab.1.

Loading conditions	*Condition description*	*Temperature*	*Wind*	*Ice/Snow*
a)	Every Day Stress	15°C	/	/
b)	Minimum temperature	Zone A -> -7°C Zone B -> -20°C		/
c)	Maximum wind	-7°C		/
d)	Combined wind-ice/snow	-2°C	0.6 Vb	Sk
e)	Maximum Temperature	Zone A -> 55°C Zone B -> 48°C	/	/

Tab. 1: Main loading condition, as defined in the standards.

Once the loads have been applied, the line must satisfy many constraints. In the proposed paper, the constraints that have been considered are:

- Structural resistance of the sustains (poles, lattice structures, etc.);
- Structural resistance of the cable;
- Minimum allowance from ground.

The constraints satisfaction is verified analytically by calculating the stress state and deformations on sustains and cables.
In this paper, the line configurations have been implemented using the functions provided by Proled, which is a tool for the configurations of overhead powerlines. The configurations data are used to automatically generate a CAD model of the line, using a developed script. The CAD model is useful

© 2019 CAD Solutions, LLC, http://www.cadconferences.com

because it can be used for aesthetics rendering, producing technical documentation, and importing the system geometry into a FEM software such as Autodesk Robot® (structural analysis). The results obtained from the finite element analysis are thus compared with the analytical computation, in order to have a double-check analysis. If the design satisfies the normative, then the process in concluded; otherwise, the line needs to be reconfigured and the analysis starts again.

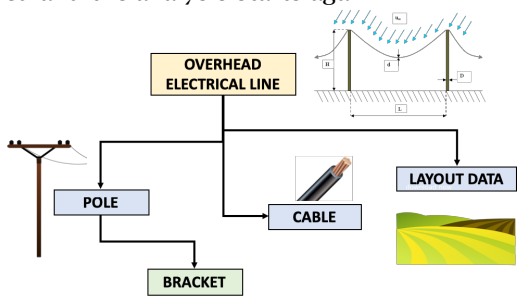

Fig. 2: the structure of an overhead power line

Fig. 2 describes the simplified system-structure of a low-voltage power line. A typical low-voltage power line network consists of a set of poles which support the conductors (cables). The number poles and the calculation of loads provided by normative increase the complexity of such system. Each pole includes a number of isolators and brackets. Fig. 3 reports the information data related to each item of the analyzed system. The information concerns: geometry, parameters, loading conditions, payback period, maintenance data, and cost.

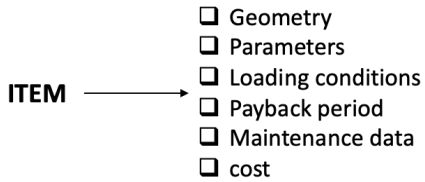

Fig. 3: The scheme of the information data for each item of the system.

<u>Test Case:</u>
The test case regards the modelling and simulation of a three-poles system. The configuration data regards an installation in North Italy.
Fig. 4 describes the design workflow used in the proposed test case. The CAD model gathers data acquired from to configurations, loadings conditions and simulations.
Fig. 5 and Fig. 6 reports two simulations analysis related to wind loading and a combination of ice and wind.

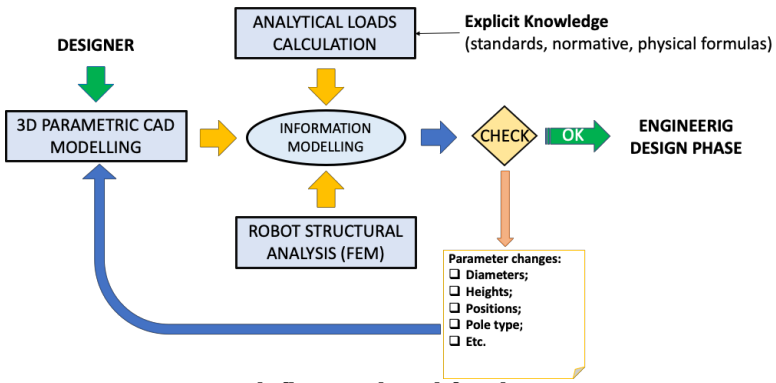

Fig. 4: Design work flow analyzed for the proposes test case.

© 2019 CAD Solutions, LLC, http://www.cadconferences.com

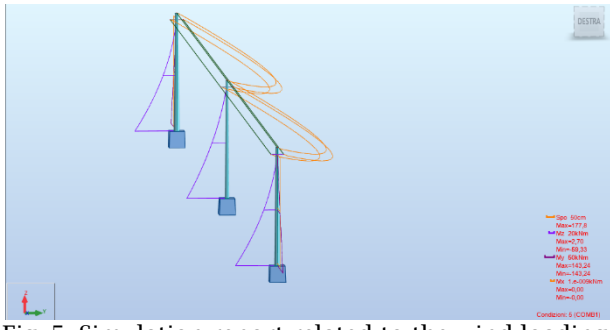

Fig. 5: Simulation report related to the wind loading.

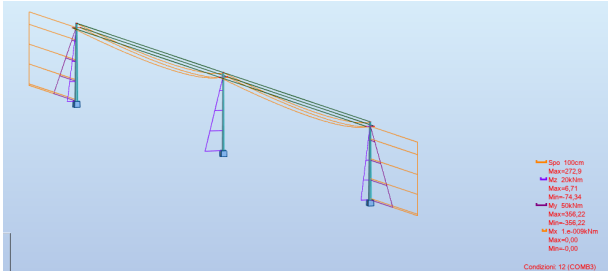

Fig. 6: Simulation result related to a combination of wind and ice condition.

Conclusions

This paper proposes an approach based on computer-aided design for modelling overhead lines. The information modelling has been included into the CAD model. A tool has been implemented to perform the connection between CAD tool and FEM software. The approach aims at reducing the gap between configurations and simulations in the context of overhead powerlines, introducing the 3D-CAD representation as an information modeling to be used in embodiment design for cost calculation and details analysis.

Acknowledge:

The authors thank Eng. Raffaele Fava and Nicola Bergantino who provided insight and expertise that greatly assisted the research.

References:

[1] Bradley, A.; Li, H.; Lark, R.; Dunn, S.: BIM for infrastructure: An overall review and constructor perspective. Automation in Construction, 71, 2016, 139–52. http://dx.doi.org/10.1016/j.autcon.2016.08.019

[2] Chen, Z.; Tao, J.; Yu, S.: A Feature-based CAD-LCA Software Integration Approach for Eco-design. Procedia CIRP, 61, 2017, 721–6. http://dx.doi.org/10.1016/j.procir.2016.11.228

[3] Cheng, Z.; Ma, Y.: A functional feature modeling method. Advanced Engineering Informatics, 33, 2017, 1–15. http://dx.doi.org/10.1016/j.aei.2017.04.003

[4] Ducloux, H.; Nygaard, BEK.: Ice loads on overhead lines due to freezing radiation fog events in plains. Cold Regions Science and Technology, 153, 2018, 120–129. http://dx.doi.org/10.1016/j.coldregions.2018.04.018

[5] Fenrick, SA.; Getachew, L.: Cost and reliability comparisons of underground and overhead power lines. Utilities Policy, 20(1), 2012, 31–37. http://dx.doi.org/10.1016/j.jup.2011.10.002

[6] Gusavac, SJ.; Nimrihter, MD.; Geric, LR.: Estimation of overhead line condition. Electric Power Systems Research, 78(4), 2008, 566–683. http://dx.doi.org/10.1016/j.epsr.2007.05.001

[7] CENELEC - EN 50341-1; European Committee for Electrotechnical Standardization (CENELEC)

© 2019 CAD Solutions, LLC, http://www.cadconferences.com

[8] Kishore, TS.; Singal, SK.: Optimal economic planning of power transmission lines: A review. Renewable and Sustainable Energy Reviews, 39, 2014, 949–974. http://dx.doi.org/10.1016/j.rser.2014.07.125

[9] Mohammadi Darestani Y.; Shafieezadeh A.; DesRoches, R.: An equivalent boundary model for effects of adjacent spans on wind reliability of wood utility poles in overhead distribution lines. Engineering Structures, 128, 2016, 441–452. http://dx.doi.org/10.1016/j.engstruct.2016.09.052

[10] Olbrycht L.: Algorithm for the design of overhead transmission lines. Computer-Aided Design, 13(5), 1981, 265–269. http://dx.doi.org/10.1016/0010-4485(81)90315-8

[11] Peyrot, AH.; Peyrot, EM.; Carton, T.: Computer-aided design of transmission lines. Engineering Structures, 15(4), 1993, 229-237. https://doi.org/10.1016/0141-0296(93)90025-Y

[12] Picard, B.; Galiana, FD.; McGillis, D.: A knowledge-based system for the structural design of high-voltage lines. Engineering Solutions for the Next Millennium 1999 IEEE Canadian Conference on Electrical and Computer Engineering (Cat No99TH8411). IEEE; http://dx.doi.org/10.1109/ccece.1999.804866

[13] Raghavendra, T.: Computer aided analysis and structural optimization of transmission line tower. International Journal of Advanced Engineering Technology, 3, 2012, 44-50.

[14] Stengel, D.; Thiele, K.: Measurements of downburst wind loading acting on an overhead transmission line in Northern Germany. Procedia Engineering, 199, 2017, 3152–3157. http://dx.doi.org/10.1016/j.proeng.2017.09.578

[15] Teegala, SK.; Singal, SK.: Optimal costing of overhead power transmission lines using genetic algorithms. International Journal of Electrical Power & Energy Systems, 83, 2016, 298–308. http://dx.doi.org/10.1016/j.ijepes.2016.04.031

[16] Zeynalian, M.; Khorasgani, MZ.: Structural performance of concrete poles used in electric power distribution network. Archives of Civil and Mechanical Engineering, 18(3),2018, 863–876. http://dx.doi.org/10.1016/j.acme.2018.01.005

© 2019 CAD Solutions, LLC, http://www.cadconferences.com