This is the peer reviewd version of the followng article:

Two examples of minimal Cheeger sets in the plane / Leonardi, Gian Paolo; Saracco, Giorgio. - In: ANNALI DI MATEMATICA PURA ED APPLICATA. - ISSN 1618-1891. - 197:5(2018), pp. 1511-1531. [10.1007/s10231-018-0735-y]

Terms of use:

The terms and conditions for the reuse of this version of the manuscript are specified in the publishing policy. For all terms of use and more information see the publisher's website.

12/10/2024 05:06

(Article begins on next page)

TWO EXAMPLES OF MINIMAL CHEEGER SETS IN THE PLANE

GIAN PAOLO LEONARDI AND GIORGIO SARACCO

Abstract. We construct two minimal Cheeger sets in the Euclidean plane, i.e. unique minimizers of the ratio "perimeter over area" among their own measurable subsets. The first one gives a counterexample to the so-called weak regularity property of Cheeger sets, as its perimeter does not coincide with the 1-dimensional Hausdorff measure of its topological boundary. The second one is a kind of porous set, whose boundary is not locally a graph at many of its points, yet it is a weakly regular open set admitting a unique (up to vertical translations) non–parametric solution to the prescribed mean curvature equation, in the extremal case corresponding to the capillarity for perfectly wetting fluids in zero gravity.

Introduction

Given $\Omega \subset \mathbb{R}^n$ open and bounded, its Cheeger constant is defined as

$$h(\Omega) := \inf_{E \subset \Omega} \frac{P(E)}{|E|}\,, \tag{1}$$

where $P(E)$ and $|E|$ denote, respectively, the De Giorgi's perimeter and the n-dimensional Lebesgue measure of E. The variational problem associated with the definition of $h(\Omega)$ first appeared in [5, 30] limitedly to convex subsets of the Euclidean plane; see also [10, 29]. A more general formulation is due to Cheeger, who proved in [7] that the first eigenvalue of the Laplace-Beltrami operator on a compact Riemannian manifold M is bounded from below by $h^2(M)/4$. Since then, the problem in the Euclidean setting has commonly been known as the *Cheeger problem.* A nice, as well as quite surprising, feature of the Cheeger problem is that it naturally appears in many different contexts such as image processing [1, 4, 6], landslide modeling [15, 16, 17], and fracture mechanics [19]. For further discussion and applications the reader could refer to the surveys [20, 26].

In particular, the Cheeger problem is closely related to the theory of existence and uniqueness of graph of prescribed mean curvature [12, 14, 23] which is the cornerstone of the theory of capillary surfaces (a comprehensive treatise is available in [13]). We recall that for an open, bounded and connected set $\Omega \subset \mathbb{R}^n$, a function $u : \Omega \to \mathbb{R}$ is a classical solution to the prescribed mean curvature equation if

$$\operatorname{div}\left(\frac{\nabla u(x)}{\sqrt{1+|\nabla u(x)|^2}}\right) = H(x), \qquad \forall x \in \Omega, \tag{PMC}$$

for a given Lipschitz function H defined on Ω. Under the assumption of $\mathcal{C}^2$ regularity of $\partial\Omega$ (or piece-wise C^1 up to a $\mathcal{H}^{n-1}$-negligible set, see [13, Chapter 6]), the conditions

$$\left|\int_A H\,dx\right| < P(A) \qquad \forall A \subsetneq \Omega\,, \qquad\qquad \left|\int_\Omega H\,dx\right| = P(\Omega) \tag{2}$$

2010 *Mathematics Subject Classification.* Primary: 49Q10, 53A10. Secondary: 35P15.

Key words and phrases. Cheeger problem; minimal Cheeger set; weak regularity; capillarity.

G.P. Leonardi and G. Saracco have been supported by GNAMPA projects: *Variational problems and geometric measure theory in metric spaces* (2016). G. Saracco has been also supported by the DFG Grant n. GZ:PR 1687/1-1.

were proved to be necessary and sufficient to existence and uniqueness (up to vertical translations) by Giusti in [14]. Then, whenever H is a positive constant, these necessary and sufficient conditions read equivalently as

$$\Omega \text{ is a minimal Cheeger set}\,, \tag{MC}$$

that is, Ω is the unique minimizer of (1), and $H = h(\Omega)$.

In [23] we have extended Giusti's results on the existence of solutions to (PMC) and on the characterization of the extremality condition (2) to the class of weakly regular sets Ω. These sets are defined as open bounded sets with finite perimeter such that

$$P(\Omega) = \mathcal{H}^{n-1}(\partial\Omega) \tag{PH}$$

and

$$\min\{P(E;\partial\Omega), P(\Omega\setminus E;\partial\Omega)\} \le kP(E;\Omega)\,, \tag{3}$$

for some $k = k(\Omega) > 0$ and for all measurable $E \subset \Omega$. We notice that any minimal Cheeger set Ω, for which the intersection $\partial\Omega \cap \Omega^{(1)}$ (where $\Omega^{(1)}$ denotes the set of points of density 1 for Ω) has $\mathcal{H}^{n-1}$-null measure, is weakly regular. This observation, which has been proved by the second author in [27], provides a sufficient condition for the weak regularity, which can be more easily checked whenever the domain Ω is a minimal Cheeger set. As a consequence, for any Ω satisfying (MC) and $\mathcal{H}^{n-1}(\Omega^{(1)} \cap \partial\Omega) = 0$, the constant mean curvature problem on Ω, for the "extremal" value of the prescribed mean curvature $H = h(\Omega)$, admits a unique solution up to vertical translations. We remark that this extremal situation corresponds to the physical case of capillarity for perfectly wetting fluids in zero gravity.

It is then natural to ask whether the weak regularity assumption is optimal with respect to the results proved in [23] on the prescribed mean curvature equation. Related to this question is the following one: does (MC) imply $\mathcal{H}^{n-1}(\Omega^{(1)} \cap \partial\Omega) = 0$? In the affirmative case, any minimal Cheeger set would be automatically weakly regular. However, in Section 2 we negatively answer this question by exhibiting a minimal Cheeger set Ω_ε in the plane (with ε a suitably small parameter) for which (PH) does not hold. Of course this set needs to be such that $\Omega_\varepsilon^{(1)} \cap \partial\Omega_\varepsilon$ has positive $\mathcal{H}^1$-measure. This is ensured by the presence of a fat Cantor set contained in $\partial\Omega_\varepsilon$, which is negligible for the perimeter measure. This lack of regularity prevents Ω_ε from being approximated in measure and perimeter by a sequence of smooth sets that are compactly contained in Ω_ε (see [28]) and from admitting a trace operator from $BV(\Omega_\varepsilon)$ to $L^1(\partial\Omega_\varepsilon)$ (see [24, Chapter 9]). Indeed, this approximation property and the existence of a suitable trace operator represent two crucial tools used in [23]. However, one might expect that such solutions exist and are unique up to vertical translations, for each one of the two possible values of H that correspond to counting or not the $\mathcal{H}^1$-measure of the fat Cantor set. At the same time, both solutions will become vertical at the reduced boundary of Ω_ε. In conclusion, this example shows that it is not possible to extend the characterization of existence and uniqueness of solutions to (PMC) given in [23, Theorem 4.1] by dropping the assumption of weak regularity of the domain (see the discussion after the proof of Theorem 2.4).

Then, in Section 3 we build a set $\Omega_{\mathbf{0}}$ that turns out to be a minimal Cheeger satisfying $\mathcal{H}^1(\Omega_{\mathbf{0}}^{(1)} \cap \partial\Omega_{\mathbf{0}}) = 0$, even though its boundary is not regular at all. More precisely, there is a set of positive $\mathcal{H}^1$-measure consisting of points of the reduced boundary of $\Omega_{\mathbf{0}}$, at which $\partial\Omega_{\mathbf{0}}$ is not locally a graph. This example is constructed starting from the unitary disk B_1 and removing smaller and smaller disks accumulating towards ∂B_1, so that the resulting set displays a kind of "porosity". This example is of interest for two reasons. First, $\Omega_{\mathbf{0}}$ is weakly regular, so that the results of [23] apply (while the previous

results due to Giusti and Finn do not) and one deduces the existence and uniqueness up to vertical translations of the solution to (PMC) in the extremal case of $H(x) = h(\Omega_{\mathbf{0}})$. Second, this example shows the following, quite remarkable fact. On the one hand, a generic small and smooth perturbation of the disk typically produces a dramatic change of the corresponding capillary solution, possibly leading even to a non-existence scenario. On the other hand, the construction of $\Omega_{\mathbf{0}}$ shows that one can produce non-smooth perturbations of a disk that, instead, preserve existence and stability of the capillary solution. Indeed, from this ancestor set, one can build an increasing sequence of minimal Cheeger sets $\Omega_{\mathbf{k}}$ converging to the unitary disk both in volume and perimeter, in such a way that the stability result [23, Proposition 4.4] holds.

Proving a set to be a minimal Cheeger is not an immediate fact. There are results allowing to infer whether a set is a Cheeger set or not and whether it is minimal or not but they apply only in limited circumstances (and limitedly to the plane), as for instance in the case of convex sets [5, 18] or simply connected sets with "no bottlenecks" [21]. Given a Cheeger set E in Ω, it is well known that $\partial E \cap \Omega$ is an analytic hyper-surface (up to a closed singular set of Hausdorff dimension at least $n-8$). Then, our proof of (MC) is achieved by showing that any Cheeger sets E of Ω satisfies $\partial E \cap \Omega = \emptyset$, which in turns says that the only Cheeger set can be Ω itself.

1. Preliminaries

We first introduce some basic notations. We fix $n \geq 2$ and denote by $\mathbb{R}^n$ the Euclidean n-space. Let $E \subset \mathbb{R}^n$, then we denote by χ_E the characteristic function of E. For any $x \in \mathbb{R}^n$ and $r > 0$ we denote by $B_r(x)$ the Euclidean open ball of center x and radius r. Whenever $x = 0$ we shall write B_r instead of $B_r(0)$. Given two sets E, F, we denote their symmetric difference by $E \Delta F = (E \setminus F) \cup (F \setminus E)$. In order to deal with rescaled sets we introduce the notation $E_{x,r} = r^{-1}(E - x)$, where $E \subset \mathbb{R}^n$, $x \in \mathbb{R}^n$, and $r > 0$. Given an open set $\Omega \subset \mathbb{R}^n$ we write $E \subset\subset \Omega$ whenever $E \subset \mathbb{R}^n$ is such that its topological closure $\overline{E}$ is a compact subset of Ω. For any measurable set $E \subset \mathbb{R}^n$ we denote by $|E|$ its n-dimensional Lebesgue measure. Concerning n-dimensional (measurable) sets, we shall identify two such sets E and F as soon as $|E \Delta F| = 0$, and write $E = F$ for the sake of brevity. Analogously the inclusions $E \subset F$ should be understood up to null sets.

Definition 1.1 (Perimeter)**.** Let E be a Borel set in $\mathbb{R}^n$. We define the perimeter of E in an open set $\Omega \subset \mathbb{R}^n$ as

$$P(E;\Omega) := \sup \left\{ \int_\Omega \chi_E(x) \operatorname{div} g(x)\, dx \ : \ g \in C^1_c(\Omega;\mathbb{R}^n)\,, \|g\|_\infty \leq 1 \right\} .$$

We set $P(E) = P(E;\mathbb{R}^n)$. If $P(E;\Omega) < \infty$ we say that E is a set of finite perimeter in Ω. In this case (see [2]) one has that the perimeter of E coincides with the total variation $|D\chi_E|$ of the vector–valued Radon measure $D\chi_E$ (the distributional gradient of the characteristic function χ_E).

Definition 1.2 (P-decomposability)**.** A set $E \subset \mathbb{R}^n$ of finite perimeter is said to be P-decomposable if there exists a pair of disjoint Borel sets S and T, such that $|S|, |T| > 0$, $E = S \cup T$, and $P(E) = P(S) + P(T)$. Otherwise, E is said to be P-indecomposable.

Definition 1.3 (Points of density α)**.** Let E be a Borel set in $\mathbb{R}^n$, $x \in \mathbb{R}^n$. If the limit

$$\theta(E)(x) := \lim_{r \to 0^+} \frac{|E \cap B_r(x)|}{\omega_n r^n}$$

exists, it is called the density of E at x. We define the set of points of density $\alpha \in [0,1]$ of E as

$$E^{(\alpha)} := \{x \in \mathbb{R}^n \ : \ \theta(E)(x) = \alpha\} .$$

We also define the essential boundary $\partial^e E := \mathbb{R}^n \setminus (E^{(0)} \cup E^{(1)})$.

Theorem 1.4 (De Giorgi Structure Theorem)**.** *Let E be a set of finite perimeter and let $\partial^* E$ be the reduced boundary of E defined as*

$$\partial^* E := \left\{ x \in \partial^e E \,:\, \lim_{r\to 0^+} \frac{D\chi_E(B_r(x))}{|D\chi_E|(B_r(x))} = -\nu_E(x) \in \mathbb{S}^{n-1} \right\} .$$

Then,

(i) *$\partial^* E$ is countably $\mathcal{H}^{n-1}$-rectifiable in the sense of Federer* [11]*;*
(ii) *for all $x \in \partial^* E$, $\chi_{E_{x,r}} \to \chi_{H_{\nu_E(x)}}$ in $L^1_{loc}(\mathbb{R}^n)$ as $r \to 0^+$, where $H_{\nu_E(x)}$ denotes the half-space through 0 whose exterior normal is $\nu_E(x)$;*
(iii) *for any Borel set A, $P(E;A) = \mathcal{H}^{n-1}(A \cap \partial^* E)$, thus in particular $P(E) = \mathcal{H}^{n-1}(\partial^* E)$;*
(iv) *$\int_E \operatorname{div} g = \int_{\partial^* E} g \cdot \nu_E \, d\mathcal{H}^{n-1}$ for any $g \in C^1_c(\mathbb{R}^n;\mathbb{R}^n)$.*

Theorem 1.5 (Federer's Structure Theorem)**.** *Let E be a set of finite perimeter. Then, $\partial^* E \subset E^{(1/2)} \subset \partial^e E$ and one has*

$$\mathcal{H}^{n-1}\left(\partial^e E \setminus \partial^* E\right) = 0 .$$

In what follows, Ω will always denote a *domain* of $\mathbb{R}^n$, i.e., an open connected set coinciding with its measure-theoretic interior. In other words, we assume that any point $x \in \mathbb{R}^n$, for which there exists $r > 0$ with the property $|B_r(x) \setminus E| = 0$, is necessarily contained in Ω.

The next result combines [24, Theorem 9.6.4] and [3, Theorem 10 (a)].

Theorem 1.6. *Let $\Omega \subset \mathbb{R}^n$ be a bounded domain with $P(\Omega) = \mathcal{H}^{n-1}(\partial\Omega) < +\infty$. Then the following are equivalent:*

(i) *there exists $k = k(\Omega)$ such that for all $E \subset \Omega$*

$$\min\{P(E;\Omega^c), P(\Omega \setminus E;\Omega^c)\} \le kP(E;\Omega);$$

(ii) *there exists a continuous trace operator from $BV(\Omega)$ to $L^1(\partial\Omega)$ with the following property: any $\varphi \in L^1(\partial\Omega)$ is the trace of some $\Psi \in W^{1,1}(\mathbb{R}^n)$ on $\partial\Omega$.*

Definition 1.7 (Cheeger constant and Cheeger set)**.** Let $\Omega \subset \mathbb{R}^n$ be an open, connected and bounded set. We define the *Cheeger constant* of Ω as

$$h(\Omega) := \inf\left\{P(A)/|A| \,:\, A \subset \Omega,\ |A| > 0\right\} . \tag{4}$$

Any Borel set $E \subset \Omega$ for which $P(E)/|E| = h(\Omega)$ is called a *Cheeger set* of Ω.

We here report some useful results on the Cheeger problem. More details are available in the survey papers [20, 26].

Proposition 1.8 (Monotonicity of the Cheeger constant)**.** *Given any two open, connected and bounded sets $\Omega_1 \subset \Omega_2$ one has $h(\Omega_1) \ge h(\Omega_2)$.*

Theorem 1.9 (Existence of Cheeger sets)**.** *Let $\Omega \subset \mathbb{R}^n$ be a bounded open set. Then the* inf *in* (4) *is a* min*, therefore at least one Cheeger set E for Ω exists.*

Proposition 1.10 (Properties of planar Cheeger sets)**.** *Let $\Omega \subset \mathbb{R}^2$ be an open, bounded and connected set and E a Cheeger set for Ω. Then the following hold*

(i) *the free boundary of E, i.e. $\partial E \cap \Omega$, is analytical and has constant curvature equal to $h(\Omega)$, hence $\partial E \cap \Omega$ is a union of arcs of circle of radius $r = h^{-1}(\Omega)$;*

(ii) *any arc in* $\partial E \cap \Omega$ *can not be longer than* πr*;*
(iii) *any arc in* $\partial E \cap \Omega$ *meets tangentially* $\partial\Omega$ *whenever they meet in a regular point of* $\partial\Omega$*;*
(iv) *the volume of* E *is bounded from below as follows*

$$|E| \geq \pi \left(\frac{2}{h(\Omega)} \right)^2 . \tag{5}$$

Notice that if E_1, E_2 are Cheeger sets of Ω, and if $E_1 \cap E_2$ is non-negligible, then one can show that $E_1 \cap E_2$ is a Cheeger set (see for instance [22, Proposition 2.5]). Coupling this fact with Proposition 1.10(iv) one easily deduces the existence of *minimal Cheeger sets* (with respect to inclusion) *within any bounded open set* Ω. If Ω is the unique minimizer of $h(\Omega)$ we shall say it is *a minimal Cheeger set.*

2. A minimal Cheeger set with a fat Cantor set in its boundary

In this section we provide an example of a minimal Cheeger set, whose perimeter is strictly smaller than the $\mathcal{H}^1$-measure of its topological boundary, that is, it does not verify property (PH). We also note that, as a consequence of the construction, it is not possible to find a Lebesgue-equivalent open set for which (PH) holds. Let us start noticing the following, general fact.

Proposition 2.1. *If* Ω *is a minimal Cheeger set such that* $\mathcal{H}^{n-1}(\Omega^{(1)} \cap \partial\Omega) = 0$*, then* $P(\Omega) = \mathcal{H}^{n-1}(\partial\Omega)$*.*

Proof. Being Ω a minimal Cheeger set such that $\mathcal{H}^{n-1}(\Omega^{(1)} \cap \partial\Omega) = 0$, by [27, Theorem 3.4] the following relative isoperimetric inequality holds:

$$\min\{P(A;\Omega^c), P(\Omega \setminus A;\Omega^c)\} \leq k\, P(A;\Omega) \qquad \forall\, A \subset \Omega$$

which in turn implies $\partial\Omega \cap \Omega^{(0)} = \emptyset$, as proved in the same paper (see [27, Lemma 3.5]). The thesis then follows at once by applying Theorems 1.4 and 1.5. □

In virtue of Proposition 2.1, in order to build a minimal Cheeger set Ω that does not satisfy (PH) we must ensure that the set of points of density 1 for Ω that are also contained in $\partial\Omega$ has positive $\mathcal{H}^{n-1}$-measure.

Consider the concentric balls $B_1, B_\varepsilon \subset \mathbb{R}^2$, where the radius $\varepsilon < 1$ will be fixed later on. We now define a set $F^\varepsilon \subset B_\varepsilon$ whose topological boundary contains a "fat" Cantor set with positive $\mathcal{H}^1$-measure. Consequently, the open set $\Omega := B_1 \setminus \overline{F^\varepsilon}$ will be shown to satisfy (MC), while (PH) fails.

We consider the segment $C_0^\varepsilon = [-\varepsilon, \varepsilon] \times \{0\} \subset \overline{B_\varepsilon}$ and iteratively construct a decreasing sequence C_i^ε, $i \in \mathbb{N}$, of compact subsets of C_0^ε, obtained at each step i of the construction by removing 2^{i-1} open segments S_j^i, $j = 1, \dots, 2^{i-1}$, of length

$$\mathcal{H}^1(S_j^i) = 2^{1-2i}\mathcal{H}^1(C_{i-1}^\varepsilon), \qquad \text{for all } j,$$

and placed in the middle of each closed segment of C_{i-1}^ε, so that the total loss of length at step i equals $2^{-i}\mathcal{H}^1(C_{i-1}^\varepsilon)$. Consequently, the set $C^\varepsilon = \lim_{i\to\infty} C_i^\varepsilon$ satisfies

$$\mathcal{H}^1(C^\varepsilon) = 2\varepsilon \prod_{k=1}^{\infty} \left(1 - 2^{-k}\right) > 0\,.$$

The strict positivity of the infinite product can be easily inferred by the fact that the series $\sum_{k=1}^{\infty} \log(1 - 2^{-k})$ is convergent. C^ε is a so-called "fat" Cantor set.

Let now $\delta > 0$ be fixed. We set

$$f_\delta(x) = \begin{cases} 1 - \sqrt{1 - (|x| - \delta)^2} & \text{if } x \in (-\delta, \delta), \\ 0 & \text{otherwise,} \end{cases}$$

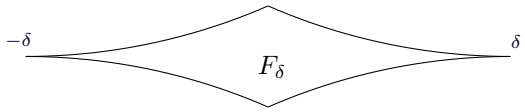

FIGURE 1. The shape of the planar set F_δ

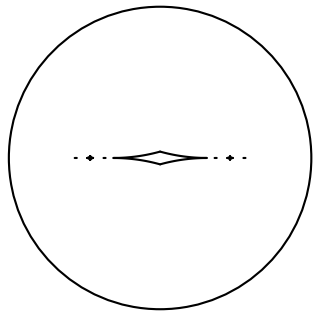

FIGURE 2. The set Ω_ε

and

$$F_\delta = \{(x,y) \in \mathbb{R}^2 \,:\, |x| \le \delta,\ |y| \le f_\delta(x)\}\,,$$

which is depicted in Figure 1.

Notice that ∂F_δ is a union of four circular arcs of radius 1. For $i \in \mathbb{N}$ we set $\delta_i = 2^{-2i}\mathcal{H}^1(C^\varepsilon_{i-1})$ and let m^i_j denote the midpoint of S^i_j, then define

$$F^\varepsilon = \bigcup_{i\in\mathbb{N}} \bigcup_{j=1}^{2^{i-1}} F^i_j\,,$$

where $F^i_j = m^i_j + F_{\delta_i}$. For $x \in [-\varepsilon, \varepsilon]$ we define

$$f(x) = \sum_{i=1}^{\infty} \sum_{j=1}^{2^{i-1}} f_{\delta_i}(x - \mu^i_j)\,, \tag{6}$$

where $(\mu^i_j, 0) = m^i_j$. We note that F^ε is contained in the region bounded by the graphs of f and $-f$. Since f is 1-Lipschitz, F^ε is necessarily contained in $\overline{B_\varepsilon}$. We now define

$$\Omega_\varepsilon = B_1 \setminus \overline{F^\varepsilon}\,, \tag{7}$$

whose aspect can be seen in Figure 2.

Proposition 2.2. *The open set Ω_ε defined in* (7) *satisfies $P(\Omega_\varepsilon) < \mathcal{H}^1(\partial\Omega_\varepsilon)$.*

Proof. In general we have $P(F^\varepsilon) \le \mathcal{H}^1(\partial F^\varepsilon)$, therefore $P(F^\varepsilon)$ is finite because $\mathcal{H}^1(\partial F^\varepsilon)$ is finite by construction. According to Theorem 1.4 we only need to show that $P(F^\varepsilon) = \mathcal{H}^1(\partial^* F^\varepsilon) < \mathcal{H}^1(\partial F^\varepsilon)$. Clearly $\partial F^\varepsilon = C^\varepsilon \cup (F^\varepsilon)^{(1/2)} \cup \hat{F}^\varepsilon$, where $\hat{F}^\varepsilon$ is the set of corner points of ∂F^ε that do not belong to the segment C^ε_0. Since $\hat{F}^\varepsilon$ is at most countable, it has null $\mathcal{H}^1$-measure and therefore

$$\mathcal{H}^1(\partial F^\varepsilon) = \mathcal{H}^1(C^\varepsilon) + \mathcal{H}^1\left((F^\varepsilon)^{(1/2)}\right) = \mathcal{H}^1(C^\varepsilon) + \mathcal{H}^1(\partial^* F^\varepsilon)\,,$$

also owing to Theorem 1.5. The claim follows at once by recalling that $\mathcal{H}^1(C^\varepsilon) > 0$. □

Now we show that Ω_ε is a minimal Cheeger set as soon as ε is small enough. The proof of this fact will be obtained through some intermediate steps. First of all, by the boundedness of Ω_ε and by Theorem 1.9 we know that Ω_ε admits at least a Cheeger set, from now on generically denoted as E. Then we have the following, intermediate result.

Proposition 2.3. *Let $\varepsilon < 1/24$ and let Ω_ε be as in* (7)*. Then*

(i) $h(\Omega_\varepsilon) \in \left(2, \frac{2}{1-\varepsilon}\right]$;
(ii) *if E is a Cheeger set of Ω_ε then any connected component of $\partial E \cap \Omega_\varepsilon$ is a circular arc with curvature equal to $h(\Omega_\varepsilon)$ and length less or equal than $\pi h(\Omega_\varepsilon)^{-1}$;*
(iii) *any Cheeger set of Ω_ε is P-indecomposable;*
(iv) *the minimal Cheeger set E_0 of Ω_ε is unique, connected, and 2-symmetric;*

Proof. By the inclusions $B_1 \setminus \overline{B_\varepsilon} \subset \Omega_\varepsilon \subset B_1$, (i) follows from Proposition 1.8. On the other hand (ii) follows from Proposition 1.10 (i)-(ii). The proof of (iii) is a bit more involved. By Proposition 1.10 (iv) we have the following lower bound for the volume of any Cheeger set E:

$$|E| \geq \pi \left(\frac{2}{h(\Omega_\varepsilon)}\right)^2 \geq \pi(1-\varepsilon)^2 = \pi(1-\varepsilon)^2. \tag{8}$$

We now argue by contradiction supposing that E is P-decomposable, so that there exist S and T, both with positive measure, and such that $E = S \cup T$ and $P(E) = P(S) + P(T)$. Then S and T are both Cheeger sets of Ω_ε (see for instance [26]), hence they must satisfy (8). Since $\varepsilon < 1/4$ we obtain $|E| = |S| + |T| > 18\pi/16 > \pi = |B_1|$, which is clearly not possible. In order to prove (iv) we notice that, thanks to the symmetry of Ω_ε, the reflection $\widetilde{E}_0$ of E_0 with respect to one of the two coordinate axes is a Cheeger set of Ω_ε, too. By the lower bound on the volume one has $|E_0 \cap \widetilde{E}_0| > 0$, then by well-known properties of Cheeger sets, such intersection is also a Cheeger set of Ω_ε. Therefore by minimality of E_0 we infer $E_0 = E_0 \cap \widetilde{E}_0 = \widetilde{E}_0$, which shows the claimed symmetry of E_0. Notice moreover that, by the same argument, E_0 is unique. In order to show the topological connectedness of E_0, we can suppose by contradiction, and without loss of generality, that there are just two connected components E_1, E_2 of E_0, and that E_2 is obtained by reflecting E_1 with respect to one of the axes of symmetry of Ω_ε. By (iii) we must have $P(E_0) < P(E_1) + P(E_2) = 2P(E_1)$. Moreover the strict inequality implies that $\mathcal{H}^1(\partial^* E_1 \cap C_0^\varepsilon) > 0$, so that we obtain

$$2P(E_1) \leq P(E_0) + 2\mathcal{H}^1(C_0^\varepsilon) = P(E_0) + 4\varepsilon\,. \tag{9}$$

Hence by (9) and the isoperimetric inequality we infer

$$\begin{aligned}\frac{4}{1-\varepsilon}|E_1| &\geq 2h(\Omega_\varepsilon)|E_1| = h(\Omega_\varepsilon)|E_0| = P(E_0)\\ &\geq 2P(E_1) - 4\varepsilon \geq 4\sqrt{\pi}|E_1|^{\frac{1}{2}} - 4\varepsilon = 4\sqrt{\frac{\pi}{2}}|E_0|^{1/2} - 4\varepsilon\\ &\geq \frac{4\pi}{\sqrt{2}}(1-\varepsilon) - 4\varepsilon.\end{aligned}$$

Then if $\varepsilon < 1/24$ we find

$$|E_0| = 2|E_1| \geq \sqrt{2}\pi(1-\varepsilon)^2 - 2\varepsilon(1-\varepsilon) > \pi,$$

that is, a contradiction. □

Theorem 2.4. *Let $\varepsilon < 1/24$. Then, Ω_ε defined in* (7) *is a minimal Cheeger set.*

Proof. Let E_0 be a minimal Cheeger set of Ω_ε. By Proposition 2.3 (iv) we know that E_0 is 2-symmetric and unique. Assume now by contradiction that E_0 does not coincide with Ω_ε. This implies that $\partial E_0 \cap \Omega_\varepsilon \neq \emptyset$, thus there exists at least one connected component of $\partial E_0 \cap \Omega_\varepsilon$ consisting of a circular arc α of radius $r = h(\Omega_\varepsilon)^{-1}$, whose endpoints p, q necessarily belong to $\partial\Omega_\varepsilon$. We now rule out all possibilities depending on where the endpoints p and q are located. This will be accomplished by the discussion of the following

four cases (hereafter we adopt the same notation introduced in the proof of Proposition 2.2, i.e., we denote by $\hat{F}^\varepsilon$ the set of corner points of ∂F^ε that do not belong to C_0^ε).

Case 1: one of the endpoints of α belongs to ∂B_1. Let us assume without loss of generality that $p \in \partial B_1$. In this case we have to distinguish two subcases. First, if $q \in \partial B_1$ then α must touch ∂B_1 in a tangential way at both p and q, however the radius r is smaller than $1/2$, so that necessarily $p = q$, that is, α is a full circle, which is in contrast with Proposition 2.3 (ii). Second, if $q \in \partial F^\varepsilon$, the arc α can be symmetric neither with respect to the x-axis nor with respect to the y-axis. Therefore, by symmetry, $\partial E_0 \cap \Omega_\varepsilon$ has at least three more other connected components. These components cannot touch, but in the endpoints. Then, there exist at least two connected components of E_0, which yields a contradiction with Proposition 2.3 (iv).

Case 2: one of the endpoints of α belongs to $\partial^* F^\varepsilon$. We can assume that $p \in \partial^* F^\varepsilon$ and $q \in \partial F^\varepsilon$. In this case the arc α is contained in the closure of the ball of radius 1 that is tangent to $\partial^* F^\varepsilon$ at p and does not intersect F^ε (by construction of F^ε there is exactly one such ball for any $p \in \partial^* F^\varepsilon$). Consequently the only possibility is that $p = q$, which is not possible as discussed in Case 1.

Case 3: p and q belong to the fat Cantor set C^ε. By the assumption on ε coupled with Proposition 2.3 (i) we infer that $r = h(\Omega_\varepsilon)^{-1} > 2\varepsilon$. Then we observe that α is the smaller arc cut by the chord $\overline{pq}$ on one of the two possible circles of radius r passing through both p and q. We finally have that $\alpha \subset B_\varepsilon$ and thus E_0 has a connected component E_0' contained in B_ε, but this is not possible as by (8) and the choice of ε we have

$$\pi\varepsilon^2 \geq |E_0'| \geq \pi \left(\frac{2}{h(\Omega_\varepsilon)}\right)^2 \geq \pi(1-\varepsilon)^2 \,.$$

Case 4: one endpoint belongs to $\hat{F}^\varepsilon$, the other to $\hat{F}^\varepsilon \cup C^\varepsilon$. As before we can assume without loss of generality that p is a corner point on the graph of f, where f is defined in (6), and that $q \in \hat{F}^\varepsilon \cup C^\varepsilon$. Notice that q must belong to the upper half-plane, otherwise α would cross the segment C_0^ε. This means that q belongs to the graph of f over $[-\varepsilon, \varepsilon]$. Moreover, the curvature vector associated with α at p must have a positive component with respect to the y-axis, otherwise we would fall into the same situation of Case 3 (i.e., the presence of a too small connected component of E_0). Consequently, by comparing the graph of f (whose generalized curvature is bounded from above by 1) with the arc α (whose curvature is $h(\Omega_\varepsilon) \geq 2$) we deduce by the maximum principle that their intersection can only contain p, which contradicts the fact that q belongs to that intersection. This concludes the discussion of Case 4, and thus the proof of the theorem. □

It is natural to ask whether solutions $u_\varepsilon^\pm$ of (PMC) with $\Omega = \Omega_\varepsilon$ and $H(x) = H_\varepsilon^\pm$ exist, for the two prescribed mean curvatures defined as

$$H_\varepsilon^- = P(\Omega_\varepsilon)/|\Omega_\varepsilon| \qquad \text{and} \qquad H_\varepsilon^+ = \mathcal{H}^1(\partial\Omega_\varepsilon)/|\Omega_\varepsilon| = \big(P(\Omega_\varepsilon) + \mathcal{H}^1(C^\varepsilon)\big)/|\Omega_\varepsilon| \,.$$

One can thus consider two approximating sequences of sets, $\{\Omega_{\varepsilon,j}^-\}_j$ and $\{\Omega_{\varepsilon,j}^+\}_j$, defined in the following way. The first sequence, $\{\Omega_{\varepsilon,j}^-\}_j$, is monotone decreasing towards Ω_ε and is obtained by subsequently removing each rescaled and translated copy of F_δ from the ball B_1. The second sequence, $\{\Omega_{\varepsilon,j}^+\}_j$, is monotone increasing and constructed by removing smaller and smaller tubular neighborhoods of $\overline{F^\varepsilon}$ from B_1. Clearly, both sequences converge to Ω_ε in the L^1 sense, however only the first one converges also in the perimeter sense, as $j \to \infty$. It can be shown that $\Omega_{\varepsilon,j}^\pm$ is a minimal Cheeger set, for all j large enough. Now, the idea is to define

$$H_{\varepsilon,j}^\pm = P(\Omega_{\varepsilon,j}^\pm)/|\Omega_{\varepsilon,j}^\pm|$$

and to solve (PMC) on $\Omega^{\pm}_{\varepsilon,j}$ with $H = H^{\pm}_{\varepsilon,j}$, thus obtaining two sequences of solutions $u^{\pm}_{\varepsilon,j}$ that, up to suitable vertical translations, and relying on the theory of generalized solutions as described in [25] (see also [14]), will converge to some limit functions $u^{\pm}_{\varepsilon}$. Then, $u^{\pm}_{\varepsilon}$ will be solutions of (PMC) on Ω_ε for $H = H^{\pm}_{\varepsilon}$, respectively. Notice that both u^{-}_{ε} and u^{+}_{ε} become vertical at the reduced boundary of Ω_ε. This shows that Ω_ε provides a counterexample to the possibility of extending the characterization of existence and uniqueness up to vertical translations, that has been proved in [23, Theorem 4.1] under the assumption of weak regularity of the domain.

3. A minimal Cheeger set with fast-decaying porosity near its boundary

In this section we provide an example of set $\Omega_{\mathbf{0}} \subset \mathbb{R}^2$ that is a minimal Cheeger set, i.e. it satisfies (MC), and whose perimeter $P(\Omega_{\mathbf{0}})$ equals $\mathcal{H}^1(\partial\Omega_{\mathbf{0}})$. Its peculiarity is that there is a subset A of the reduced boundary $\partial^*\Omega_{\mathbf{0}}$ with $\mathcal{H}^1(A) > 0$, such that $\partial\Omega_{\mathbf{0}}$ is not locally a graph at any point $x \in A$.

We define the set J of pairs $\mathbf{j} = (j_1, j_2)$ such that $j_1, j_2 \in \mathbb{N}$ and $j_2 \le j_1$, then for any $\mathbf{j} \in J$ we set

$$\mathbf{j} + 1 = \begin{cases} (j_1 + 1, 1) & \text{if } j_2 = j_1, \\ (j_1, j_2 + 1) & \text{if } j_2 < j_1. \end{cases}$$

We fix two sequences $(\varepsilon_{\mathbf{j}})_{\mathbf{j}\in J}$ and $(r_{\mathbf{j}})_{\mathbf{j}\in J}$ of positive real numbers between 0 and $\frac{1}{2}$, that will be specified later, and define

$$\rho_{\mathbf{j}} = 1 - \varepsilon_{\mathbf{j}}, \qquad \theta_{\mathbf{j}} = j_2 \cdot \frac{\pi}{2(j_1+1)},$$
$$x_{\mathbf{j}} = \rho_{\mathbf{j}} \left(\cos(\theta_{\mathbf{j}}), \sin(\theta_{\mathbf{j}})\right), \qquad B_{\mathbf{j}} = B_{r_{\mathbf{j}}}(x_{\mathbf{j}}),$$

so that in particular $x_{\mathbf{j}}$ is a point of $B_1 = B_1(0)$ contained in the first quadrant, for all $\mathbf{j} \in J$. We write $\mathbf{j} \preceq \mathbf{j}'$ (or equivalently $\mathbf{j}' \succeq \mathbf{j}$) if $\mathbf{j}$ precedes or is equal to $\mathbf{j}'$ with respect to the standard lexicographic order on J. The notion of "limit as $\mathbf{j} \to \infty$" is the obvious one associated with this order relation. We require the following properties on the sequences introduced above:

(i) $\sum_{\mathbf{j}} r_{\mathbf{j}} \le 1/(2^8 + 1)$;
(ii) $\varepsilon_{\mathbf{1}} < 1/4$;
(iii) $\varepsilon_{\mathbf{j}+1} \le \frac{3}{10}\varepsilon_{\mathbf{j}}$;
(iv) $r_{\mathbf{j}} \le 2^{-18}\varepsilon^3_{\mathbf{j}}$.

Notice that (iii) and (iv) imply that $\varepsilon_{\mathbf{j}} - 2\varepsilon_{\mathbf{j}+1} \ge r_{\mathbf{j}} + 2r_{\mathbf{j}+1}$. This in turn implies that the closures of the balls $B_{r_{\mathbf{j}}}(x_{\mathbf{j}})$ are pairwise disjoint. We then set

$$\Omega_{\mathbf{0}} := B_1 \setminus \bigcup_{\mathbf{j}\succeq\mathbf{0}} \overline{B_{\mathbf{j}}}, \tag{10}$$

which is an open set since the only accumulation points of the sequence of "holes" $B_{\mathbf{j}}$ are contained in ∂B_1. Sequential zoom-ups of how this set is, can be seen in Figure 3. Once proved that this set is a minimal Cheeger set, it is quite easy to build from it a sequence of minimal Cheeger sets converging to the unitary ball both in volume and in perimeter by "filling" the holes one at a time. Let indeed $\Omega_{\mathbf{k}}$ be the set defined by

$$\Omega_{\mathbf{k}} := B_1 \setminus \bigcup_{\mathbf{j}\succeq\mathbf{k}} \overline{B_{\mathbf{j}}}\,.$$

Clearly $\Omega_{\mathbf{k}} \subset \Omega_{\mathbf{h}}$ whenever $\mathbf{k} \preceq \mathbf{h}$, and as $\mathbf{k} \to \infty$ the sequence $\Omega_{\mathbf{k}} \to B_1$ both in perimeter and area. It is clear that their Cheeger constants converge to that of the unit disk B_1. Therefore, one can apply the

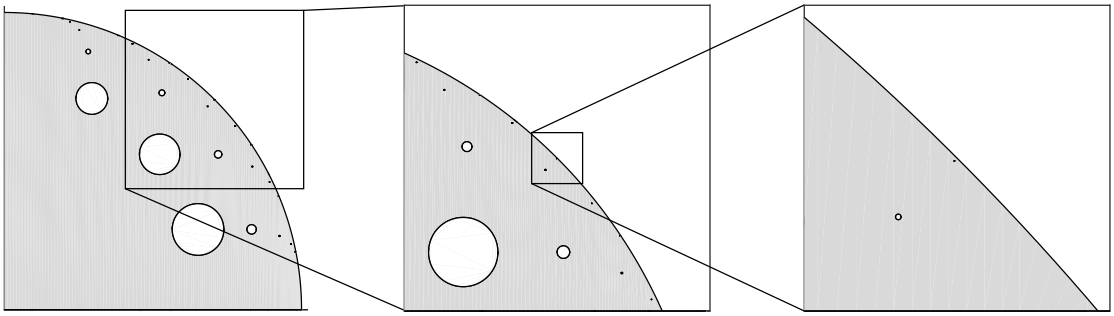

FIGURE 3. Close-ups of the set $\Omega_{\mathbf{0}}$ of Section 3.

stability result for solutions of the prescribed mean curvature equation proved in [23, Proposition 4.4] to this sequence of domains.

Before dealing with the minimality of $\Omega_{\mathbf{0}}$, we show that the topological boundary $\partial\Omega_{\mathbf{0}}$ coincides with the reduced boundary $\partial^*\Omega_{\mathbf{0}}$.

Proposition 3.1. *Under the above assumptions (i)-(iv) one has* $\partial\Omega_{\mathbf{0}} = \partial^*\Omega_{\mathbf{0}}$.

Proof. Of course $\partial^*\Omega_{\mathbf{0}} \subseteq \partial\Omega_{\mathbf{0}}$. In order to prove the opposite inclusion we fix $y \in \partial\Omega_{\mathbf{0}}$ and argue as follows. If $y \in \partial B_{\mathbf{j}}$ for some $\mathbf{j} \in J$, or $y \in \partial B_1 \setminus \{z = (z_1, z_2) \in \mathbb{R}^2 \,:\, z_1 \geq 0, z_2 \geq 0\}$, then there exists a neighborhood U_y of y such that $\partial\Omega_{\mathbf{0}} \cap U_y$ is an arc of ∂B_1 or $\partial B_{\mathbf{j}}$, hence trivially $y \in \partial^*\Omega_{\mathbf{0}}$. Assume now that $y \in \partial B_1$ with non-negative coordinates y_1, y_2. It is standard to check that, in this case, $y \in \partial^*\Omega_{\mathbf{0}}$ if and only if

$$P(\Omega_{\mathbf{0}}; B_s(y)) \leq 2s + o(s), \quad s \to 0\,. \tag{11}$$

In order to show (11) we first set

$$J_2(j_1, s) = \Big\{ j_2 \in \{1, \dots, j_1\} : \ |x_{\mathbf{j}} - y| < s + r_{\mathbf{j}} < 2s \Big\}\,.$$

Then there exists a least index $j_1(s) \in \mathbb{N}$ such that $J_2(j_1, s)$ is empty whenever $j_1 < j_1(s)$, while in general we obtain

$$\#J_2(j_1, s) \leq 1 + \frac{32(j_1+1)s}{\pi} \quad \text{when } j_1 \geq j_1(s). \tag{12}$$

To prove this estimate on the cardinality of $J_2(j_1, s)$ we observe that for $\mathbf{j} = (j_1, j_2)$ and $\mathbf{j}' = (j_1, j_2')$ belonging to $J_2(j_1, s)$ we have

$$\frac{1}{2}\Big|(\cos\theta_{\mathbf{j}} - \cos\theta_{\mathbf{j}'}, \sin\theta_{\mathbf{j}} - \sin\theta_{\mathbf{j}'})\Big| \leq |x_{\mathbf{j}} - x_{\mathbf{j}'}| \leq |x_{\mathbf{j}} - y| + |x_{\mathbf{j}'} - y| < 4s\,, \tag{13}$$

where for the first inequality we have also used the fact that $|x_{\mathbf{j}}| > \frac{1}{2}$ for all $\mathbf{j}$. Then, setting

$$h = |\theta_{\mathbf{j}} - \theta_{\mathbf{j}'}| = \frac{|j_2' - j_2|\pi}{2(j_1+1)}$$

one easily obtains from (13) that

$$\sin h \leq |(\cos\theta_{\mathbf{j}} - \cos\theta_{\mathbf{j}'}, \sin\theta_{\mathbf{j}} - \sin\theta_{\mathbf{j}'})| < 8s\,,$$

whence assuming $s < \frac{1}{16}$ one deduces

$$h \leq 16s\,,$$

which implies $|j_2 - j_2'| \le 32(j_1+1)s/\pi$. Then (12) follows at once. In conclusion we find

$$P(\Omega_{\mathbf{0}}; B_s(y)) = 2s + o(s) + P\left(\bigcup_{\mathbf{j}\in J} B_{\mathbf{j}}; B_s(y)\right) \le 2s + o(s) + \sum_{j_1=1}^{\infty} \sum_{j_2\in J_2(j_1,s)} 2\pi r_{\mathbf{j}}$$
$$\le 2s + o(s) + s \sum_{j_1=j_1(s)}^{\infty} [2\pi + 64(j_1+1)] r_{(j_1,1)} = 2s + o(s)$$

where the last equality relies on the fact that

$$k r_{(k,1)} \le k\varepsilon_{(k,1)}^3 \le k\varepsilon_{\mathbf{1}}^3 \left(\frac{3}{10}\right)^{3(k^2-k)/2}$$

which follows by (ii), (iii) and (iv). This latter says that the sum converges. □

By Theorem 1.9, $\Omega_{\mathbf{0}}$ admits at least one Cheeger set. We will denote by E a Cheeger set of $\Omega_{\mathbf{0}}$. The main goal now is to show that, necessarily, $E = \Omega_{\mathbf{0}}$.

Theorem 3.2. *Let $\varepsilon_{\mathbf{j}}$ and $r_{\mathbf{j}}$ be such that (i)-(iv) hold. Then, $\Omega_{\mathbf{0}}$ is a minimal Cheeger set.*

The proof of Theorem 3.2 will require some preliminary results. We start by defining the following quantity

$$\delta = \frac{1 + \sum_{\mathbf{j}} r_{\mathbf{j}}}{1 - \sum_{\mathbf{j}} r_{\mathbf{j}}^2} - 1\,,$$

which will be used later on.

Proposition 3.3. *Let $\Omega_{\mathbf{0}}$ be defined as in* (10) *and let E be a Cheeger set of $\Omega_{\mathbf{0}}$. Assume that (i)-(iv) hold. Then,*

$$2 \le h(\Omega_{\mathbf{0}}) \le 2(1+\delta), \tag{14}$$

$$|E| \ge \frac{\pi}{(1+\delta)^2}\,. \tag{15}$$

Proof. The first inequality in (14) follows directly from the inclusion $\Omega_{\mathbf{0}} \subset B$ and from Proposition 1.10, while the second is a consequence of $h(\Omega_{\mathbf{0}}) \le \frac{P(\Omega_{\mathbf{0}})}{|\Omega_{\mathbf{0}}|}$. Then (15) follows from (5) at once. □

Notice that (i) implies $\delta < 1/2^7$. Indeed let $\eta = \sum_{\mathbf{j}} r_{\mathbf{j}}$. Then, since $\eta > \sum_{\mathbf{j}} r_{\mathbf{j}}^2$ one has

$$\delta = \frac{1 + \sum_{\mathbf{j}} r_{\mathbf{j}}}{1 - \sum_{\mathbf{j}} r_{\mathbf{j}}^2} - 1 \le \frac{1+\eta}{1-\eta} - 1 \le \frac{1}{2^7}\,. \tag{16}$$

Thus, by Proposition 3.3 we have

$$2 \le h(\Omega_{\mathbf{0}}) \le 2(1+\delta) < 3\,. \tag{17}$$

Lemma 3.4. *Let Γ be an arc swept by a disk of radius $r < 1/2$ contained in an annulus of inner and outer radii equal to, respectively, $1/2$ and 1. Denote by o the center of the annulus and by a, b the endpoints of Γ. If the region R enclosed by (the vectors) a, b and Γ is convex then*

$$|p| \ge \min\{|a|, |b|\} \qquad \forall\, p \in \Gamma\,.$$

Proof. The configuration described in the statement is depicted in Figure 4. To prove the lemma we argue by contradiction and suppose that there exists $p_0 \in \Gamma \setminus \{a, b\}$ such that

$$|p_0| = \min_{p\in\Gamma} |p| < \min\{|a|, |b|\}\,.$$

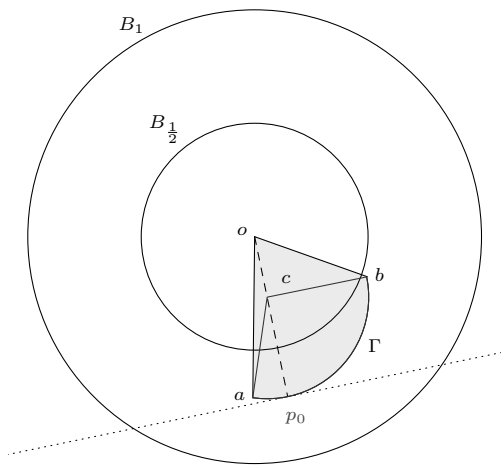

FIGURE 4. The configuration of Lemma 3.4.

If we denote by c the center of the disk sweeping the arc Γ, by minimality of p_0 we have that p_0, c, o lie on the same line. Moreover, being the region R convex by our assumption, we infer that c and o lie on the same half-plane cut by the tangent in p_0 to Γ. We now claim that c lies in between o and p_0. If this were not the case one would have $|p_0 - c| > |p_0|$ which in turn implies $r > 1/2$ against our hypotheses. Therefore we have $|p_0 - c| + |c| = |p_0|$ and by the triangular inequality

$$|a| \le |c| + |c - a| = |c| + |p_0 - c| = |p_0|,$$

against our initial assumption. □

Lemma 3.5 (Density estimate)**.** *Let E be a Cheeger set of $A \subset \mathbb{R}^2$. Fix $z \in A$ and $r > 0$ such that $B_r(z) \subset A$. Then*

$$|B_r(z) \setminus E| \le \pi r^2/36 \quad \Rightarrow \quad B_{2r/3}(z) \subset E\,. \tag{18}$$

Proof. Let us set $m(r) = |B_r(z) \setminus E|$ and define $F = E \cup B_r(z)$ as a competitor. The minimality of E implies that

$$\begin{aligned}\frac{P(E)}{|E|} \le \frac{P(F)}{|F|} &= \frac{P(E, \mathbb{R}^2 \setminus \overline{B_r(z)}) + m'(r)}{|E| + m(r)} \\ &= \frac{P(E) - P(B_r(z) \setminus E) + 2m'(r)}{|E| + m(r)}\end{aligned}$$

for almost all $r > 0$, hence

$$\frac{P(E)}{|E|} m(r) + P(B_r(z) \setminus E) \le 2m'(r)\,.$$

In particular we find that $P(B_r(z) \setminus E) \le 2m'(r)$, therefore by the isoperimetric inequality in $\mathbb{R}^2$ we obtain

$$m'(r) \ge \sqrt{\pi} m(r)^{\frac{1}{2}}\,. \tag{19}$$

If we now assume by contradiction that $m(2r/3) > 0$ then we can integrate the differential inequality

$$\frac{m'(t)}{m(t)^{\frac{1}{2}}} \ge \sqrt{\pi}$$

between $2r/3$ and r, thus obtaining

$$0 < m(2r/3)^{\frac{1}{2}} \leq m(r)^{\frac{1}{2}} - \frac{\sqrt{\pi r^2}}{6} \leq 0\,,$$

that is a contradiction. □

Lemma 3.6. *Let $\Omega_{\mathbf{0}}$ be constructed as before. If (i)-(iv) hold, then the disk $B_{1/2}$ is contained in any Cheeger set E of $\Omega_{\mathbf{0}}$.*

Proof. By (15) and (16) we have that

$$|B_{3/4} \setminus E| \leq |B_1| - |E| \leq \pi - \frac{\pi}{(1+\delta)^2} = \frac{2+\delta}{(1+\delta)^2}\pi\delta \leq \frac{2+\delta}{1+\delta}\pi\delta \leq 2\pi\delta \leq \frac{\pi(3/4)^2}{36}\,,$$

hence we can apply Lemma 3.5 and obtain that $B_{1/2} = B_{\frac{2}{3}\cdot\frac{3}{4}} \subset \Omega_{\mathbf{0}}$ is also contained in E. □

Let us fix a Cheeger set E of $\Omega_{\mathbf{0}}$ and assume that $\partial E \cap \Omega_{\mathbf{0}} \neq \emptyset$. Then we consider the (at most countable) collection $\{\Gamma_k\}_{k\in\mathbb{N}}$ of the closures of the connected components of $\partial E \cap \Omega_{\mathbf{0}}$. Notice that Γ_k is a closed circular arc of radius $r = h(\Omega_{\mathbf{0}})^{-1}$.

We observe that $\cup_k \Gamma_k$ is locally compact in B_1, as only a finite number of arcs can have a nonempty intersection with B_t, for all $0 < t < 1$. Then, we have the following result.

Lemma 3.7. *Assume (i)-(iv) and that $\partial E \cap \Omega_{\mathbf{0}} \neq \emptyset$. Denote by p_0 a point of $\cup_k \Gamma_k$ minimizing the distance from the origin. Then there exists k_0 such that p_0 is one of the endpoints of Γ_{k_0}.*

Proof. Since $\cup_k \Gamma_k \cap B_1$ is nonempty and locally compact in B_1, there exists $k_0 \in \mathbb{N}$ such that $p_0 \in \Gamma_{k_0}$. Assume now by contradiction that p_0 is not one of the endpoints a_0, b_0 of Γ_{k_0}, then owing to Lemma 3.6, $B_{1/2} \subset E$. Thus by Lemma 3.4, the region enclosed by Γ_{k_0} and the segments connecting a_0 and b_0 to the origin cannot be convex. Therefore, since $B_{1/2} \subset E$, the segment σ_0 connecting p_0 to the origin must intersect the boundary of E at some first point q_0 strictly closer than p_0 to the origin. Indeed, the Cheeger set locally lies on the convex side of Γ_{k_0} near p_0. To conclude we need to exclude the possibility that $q_0 \in \partial\Omega_{\mathbf{0}} \setminus \partial B_1$, which means that $q_0 \in \partial B_{\mathbf{j}}$ for some $\mathbf{j}$. Let now consider the shortest of the two closed arcs of $\partial B_{\mathbf{j}}$ cut by σ_0 (note that the arc could degenerate to a single point), and call it γ. Notice that all the points of γ have a distance from the origin which is strictly less than $|p_0|$. Then γ must contain at least an endpoint of some Γ_k, otherwise there would exist an open neighbourhood U of γ such that $U \cap \partial E \cap \Omega_{\mathbf{0}} = \emptyset$, but this cannot hold as U must contain points of E (this comes from the fact that $q_0 \in \gamma$) as well as points of $\Omega_{\mathbf{0}} \setminus E$ (this is a consequence of the fact that the connected component of $\sigma_0 \cap \Omega_{\mathbf{0}}$ having an endpoint on $\partial B_{\mathbf{j}}$, and being the closest to p_0, is made of points of $\Omega_{\mathbf{0}} \setminus E$). Therefore $q_0 \in \Omega_{\mathbf{0}}$, hence $q_0 \in \Gamma_k$ for some k, which contradicts the minimality of p_0. This concludes the proof. □

Lemma 3.8. *Assume (i)-(iv) and let p_0 be as in Lemma 3.7. Then letting α be the angle spanned by the half-tangent to Γ_{k_0} in p_0 and the segment connecting p_0 to the origin, one has*

$$\alpha > \frac{\pi}{2} + \frac{d_0}{2}\,, \tag{20}$$

where $d_0 = dist(p_0, \partial B_1)$.

Proof. Let $B_{\mathbf{j}}$ be the ball whose boundary contains p_0. Let p_1 be the second endpoint of Γ_{k_0} and denote by p_* the point of Γ_{k_0} minimizing the distance from ∂B_1. Since $p_1 \in \partial\Omega_{\mathbf{0}}$, by construction of $\Omega_{\mathbf{0}}$ we infer that either $p_1 \in \partial B_1$, or $p_1 \in \partial B_{\mathbf{j}'}$ with $\mathbf{j} \prec \mathbf{j}'$, therefore the distance $d_* = \mathrm{dist}(p_*, \partial B_1)$ must satisfy $d_* < d_0/2$. Indeed this holds true if $\varepsilon_{\mathbf{j}} - 2\varepsilon_{\mathbf{j}+1} \geq r_{\mathbf{j}} + 2r_{\mathbf{j}+1}$, which follows from conditions (vii) and (viii).

Let c be the center of the arc Γ_{k_0} and consider the triangle T with vertices p_0, c and the origin. Notice that $|p_0 - c| = r < 1/2$ and $|p_0| = 1 - d_0$ while by the triangular inequality applied to the triangle T^* of vertices p^*, c, o we have

$$|c| \geq |p^*| - r = 1 - r - d^* \geq 1 - r - d_0/2\,.$$

Moreover if we assume that $\alpha < \pi$ (otherwise the estimate would be trivial) then the internal angles of T at p_0 and at the origin (respectively, γ and β) are smaller than $\pi/2$. Indeed for $\alpha < \pi$ we find that

$$\langle p_0, \nu_{\mathbf{j}}(p_0)\rangle < 0\,,$$

where $\nu_{\mathbf{j}}(p_0)$ denotes the outer normal to $\partial B_{\mathbf{j}}$ at p_0, thus $\alpha > \pi/2$. Then, $\gamma = \alpha - \pi/2 \in [0, \pi/2)$. Finally, $|p_0| > r$, whence $\beta < \pi/2$ as claimed. Consequently the orthogonal projection z of c onto the line through the opposite side of T must lie between the origin and p_0, that is, $|p_0| = |z| + |p_0 - z|$. Then we have

$$|c|^2 - |z|^2 = r^2 - |p_0 - z|^2\,,$$

whence by rearranging terms

$$\begin{aligned} |c|^2 - r^2 &= |z|^2 - |p_0 - z|^2 \\ &= |p_0| \cdot (|z| - |p_0 - z|) \\ &= |p_0| \cdot (|p_0| - 2|p_0 - z|) \\ &= (1 - d_0)(1 - d_0 - 2|p_0 - z|)\,. \end{aligned}$$

On the other hand

$$|c|^2 - r^2 \geq (1 - r - d_0/2)^2 - r^2 = 1 + d_0^2/4 - 2r - d_0 + d_0 r\,,$$

thus we find

$$2|p_0 - z| \leq 1 - d_0 - \frac{1 + d_0^2/4 - (2 - d_0)r - d_0}{1 - d_0}\,.$$

Consequently we have

$$\begin{aligned} \cos\gamma = \frac{|p_0 - z|}{r} &\leq \frac{2r(1 - d_0) + rd_0 - d_0 + 3d_0^2/4}{2r(1 - d_0)} \\ &= 1 - \frac{d_0(1 - r) - 3d_0^2/4}{2r(1 - d_0)} < 1 - d_0/4\,, \end{aligned}$$

where the last inequality follows as soon as $d_0 < 1/3$. Being $d_0 \leq \varepsilon_{\mathbf{1}} + r_{\mathbf{1}}$, this condition is met thanks to (ii) and (iii). Then, we have

$$\sin^2\gamma = 1 - \cos^2\gamma > 1 - (1 - d_0/4)^2 = d_0/2 - d_0^2/4 > d_0^2/4$$

and thus we conclude that

$$\gamma > \sin\gamma > d_0/2\,.$$

Since $\alpha = \pi/2 + \gamma$, we get (20). □

Lemma 3.9. *Assume (i)-(iv) and let p_0, Γ_{k_0}, d_0 and α be as in Lemma 3.8. Let $p \in \Gamma_{k_0}$ be a point such that $0 < |p_0 - p| < d_0/12$. Then, denoting by η the angle in p_0 spanned by the half-tangent to Γ_{k_0} at p_0 and the segment from p_0 to p, one has*

$$\xi := \alpha - \eta > \frac{\pi}{2} + \frac{d_0}{4}\,. \tag{21}$$

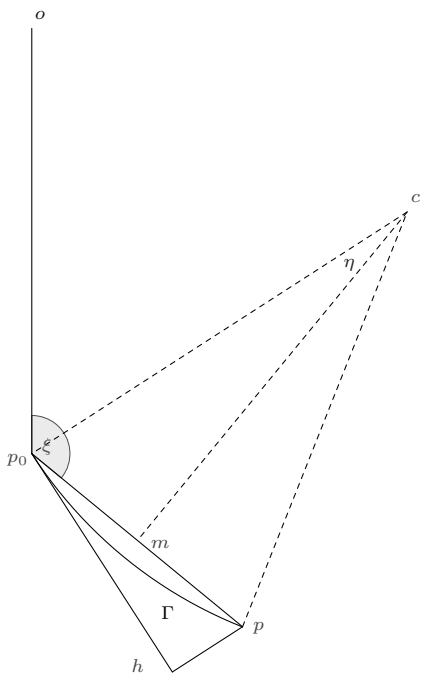

FIGURE 5. The configuration of Lemma 3.9.

Proof. Let c be the center of the disk sweeping Γ_{k_0} and let h be the projection of p onto the half-tangent to Γ_{k_0} at p_0. Since $\xi = \alpha - \eta$, by Lemma 3.8, it is enough to provide an upper bound for η.

To this aim we consider the triangles T of vertices p_0, p_h and h and S of vertices p_0, c and m, where m is the midpoint of the segment $p - p_0$, as in Figure 5. It is easy to see they are similar with angles $\pi/2, \eta$, and $\pi/2 - \eta$. Therefore we have the proportionality relation

$$\frac{|p-h|}{|p-p_0|} = \frac{|p-p_0|}{2r}\,,$$

whence by recalling that $0 < \eta < \pi/2$ and that $r > 1/3$ by (14) and the condition on δ one obtains

$$\frac{\eta}{2} \le \sin(\eta) = \frac{|p-h|}{|p-p_0|} = \frac{|p-p_0|}{2r} < \frac{d_0}{24r} < \frac{d_0}{8}\,. \tag{22}$$

This upper bound on η combined with (20) yields the claim. □

Remark 3.10. Note that Lemmas 3.8 and 3.9 hold whenever p_0 is the endpoint of an arc Γ such that p_0 minimizes $|p|$ among $p \in \Gamma$.

3.1. **Proof of Theorem 3.2.** We remark that it would not be too difficult to apply a compactness argument and show that, for a suitable choice of parameters, the set $\Omega^{\mathbf{j}}$ defined as

$$\Omega^{\mathbf{j}} := B_1 \setminus \bigcup_{\mathbf{i} \preceq \mathbf{j}} \overline{B_{\mathbf{i}}}\,,$$

is a minimal Cheeger set for all $\mathbf{j}$. Then, by passing to the limit as $\mathbf{j} \to \infty$ and by exploiting Theorem 2.7 of [22], we would infer that $\Omega_{\mathbf{0}}$ is a Cheeger set as well. However, this simple argument tells us nothing about the uniqueness of the Cheeger set of $\Omega_{\mathbf{0}}$. In other words, there seems to be no way of deducing that $\Omega_{\mathbf{0}} = \lim_{\mathbf{j}} \Omega^{\mathbf{j}}$ is a minimal Cheeger set from the minimality of $\Omega^{\mathbf{j}}$. This is due to the lack of uniform

a-priori estimates in the spirit of the quantitative isoperimetric inequality (see in particular [8, 9]). In this specific case, the existence of a modulus of continuity φ independent of $\mathbf{j}$, such that

$$P(E)/|E| - h(\Omega^{\mathbf{j}}) \geq \varphi(|\Omega^{\mathbf{j}} \setminus E|)$$

for all $\mathbf{j}$ and all measurable $E \subset \Omega^{\mathbf{j}}$, would be needed. By an application of the selection principle introduced in [8] we could obtain $\varphi = \varphi_{\mathbf{j}}$, however it is not clear how to exclude a possible degeneracy of the sequence $\{\varphi_{\mathbf{j}}\}_{\mathbf{j}}$, as $\mathbf{j} \to \infty$. Therefore we choose to follow what reveals to be a much more involved and technically complex path leading to a direct proof of uniqueness. Indeed, by combining the various, intermediate lemmas proved before we ultimately show that any Cheeger set E of $\Omega_{\mathbf{0}}$ must necessarily satisfy $\partial E \cap \Omega_{\mathbf{0}} = \emptyset$. Owing to the connectedness of $\Omega_{\mathbf{0}}$ and the fact that $B_{1/2} \subset E$, this is sufficient to conclude that $E = \Omega_{\mathbf{0}}$. Before delving into the proof, we remark that there are four different kinds of arcs inside $\partial E \cap \Omega_{\mathbf{0}}$, depending on where their endpoints lie:

(a) arcs Γ with both endpoints on ∂B_1;
(b) arcs Γ with both endpoints on $\partial B_{\mathbf{j}}$ for some $\mathbf{j}$;
(c) arcs Γ with an endpoint of ∂B_1 and one of $\partial B_{\mathbf{j}}$ for some $\mathbf{j}$;
(d) arcs Γ with an endpoint on $\partial B_{\mathbf{j}}$ and one on $\partial B_{\mathbf{i}}$ with $\mathbf{j} \neq \mathbf{i}$.

While cases (a) and (b) can be easily excluded by property (ii) of Proposition 1.10, cases (c) and (d) are much trickier. For these latter two cases the argument is actually the same: we will build a competitor that has a smaller Cheeger ratio, thus contradicting the minimality of E. In order to do so, we will also employ Lemma 3.9.

Proof of Theorem 3.2. Argue by contradiction and suppose $\partial E \cap \Omega_{\mathbf{0}} \neq \emptyset$.

Step 1. We start by showing that cases (a) and (b) cannot happen. Let Γ be the arc with endpoints $p, q \in \partial B_{\mathbf{j}}$. Being these points regular, by Proposition 1.10 (iii) the arc Γ must be tangent to $B_{\mathbf{j}}$ in both points. By Proposition 3.3 and the choice of $r_{\mathbf{j}}$ the curvature of $B_{\mathbf{j}}$ is strictly greater than the curvature of Γ. Therefore one necessarily has that points p and q coincide which implies that Γ is a full circle which contradicts property (ii) of Proposition 1.10. An analogue reasoning holds for an arc Γ with endpoints $p, q \in \partial B_1$.

Step 2. We now show that cases (c) and (d) cannot happen. We will exhibit a competitor to E that has a better Cheeger ratio against the minimality of E. Pick the point p_0 provided by Lemma 3.7 and consider the arc Γ_{p_0} with endpoint p_0. There exists a pair $\mathbf{j}$ such that $p_0 \in \partial B_{\mathbf{j}}$. Trivially there exists at least another point q_0 on the boundary of $B_{\mathbf{j}}$ from which another arc of $\partial E \cap \Omega_{\mathbf{0}}$ departs. Let $z \in \partial B_{\mathbf{j}}$ be the "north pole", i.e. the closest point to the origin. Note that there is only a finite number of arcs of $\partial E \cap \Omega_{\mathbf{0}}$ touching $\partial B_{\mathbf{j}}$. Moreover, since $|p_0| > r$ we find that $|p_0| > |z|$ (otherwise we would have $p_0 = z$ and this would contradict the fact that p_0 minimizes the distance of points of Γ_{p_0} from the origin). This shows that z is contained in a connected component ψ of $\partial B_{\mathbf{j}} \setminus \mathcal{E}_{\mathbf{j}}$, where $\mathcal{E}_{\mathbf{j}}$ denotes the (finite) set of endpoints of arcs of $\partial E \cap \Omega_{\mathbf{0}}$ that lie on $\partial B_{\mathbf{j}}$. One of the endpoints of ψ is, of course, p_0. Let q_0 denote the other endpoint belonging to the arc Γ_{q_0}.

From now on we shall assume that ψ is smaller than a half-circle, otherwise the construction of the competitor would be even easier.

Since p_0 minimizes the distance of $\partial E \cap \Omega_{\mathbf{0}}$ from the origin we have that

$$d_{q_0} := \mathrm{dist}(q_0, \partial B_1) \leq \mathrm{dist}(p_0, \partial B_1) =: d_{p_0}.$$

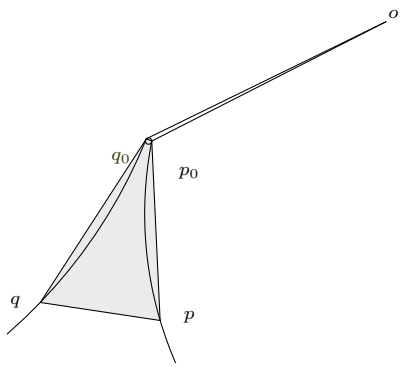

FIGURE 6. The way the competitor is build.

We now fix two points $q \in \Gamma_{q_0}$ and $p \in \Gamma_{p_0}$ such that

$$|p - p_0| = |q - q_0| = \frac{d_{q_0}}{16}. \tag{23}$$

We can apply Lemma 3.9 to the couples of points p, p_0 and q, q_0 obtaining the estimate from below of the angles ξ_q and ξ_p (that correspond to ξ in Lemma 3.9):

$$\xi_q, \xi_p > \frac{\pi}{2} + \frac{d_{q_0}}{4}. \tag{24}$$

We now modify the Cheeger set E into $\widetilde{E}$ by adding the region delimited by $\partial B_{\mathbf{j}}, \Gamma_{q_0}, \Gamma_{p_0}$ and the segment $p - q$. To contradict the minimality of E it is enough to show that $\delta P = P(\widetilde{E}) - P(E) < 0$ for ε small enough. It is straightforward that

$$\delta P \leq 2\pi r_{\mathbf{j}} - |p - p_0| - |q - q_0| + |p - q| = 2\pi r_{\mathbf{j}} - 2|p - p_0| + |p - q|. \tag{25}$$

Therefore we need to estimate $|p - q|$ from above. In order to do so, we will employ the angles of the isosceles trapezoid with vertices p_0, q_0, q, p (and, respectively, angles γ_0 and γ) and the triangle T of vertices o, p_0, q_0 (and, respectively, angles σ, α, β), denoted as in Figure 6. We then have

$$\begin{cases} \gamma_0 + \gamma = \pi & \text{(26a)} \\ \alpha + \beta + \xi_q + \xi_p + 2\gamma_0 = 4\pi & \text{(26b)} \\ \alpha + \beta + \sigma = \pi & \text{(26c)} \end{cases}$$

where (26a) denotes the (half of the) sum of interior angles of the trapezoid, (26b) the sum of the angles in p_0 and in q_0, and (26c) the sum of the interior angles of the triangle T.

Subtracting (26c) to (26b), and combining the resulting equality with (24) we find

$$2\gamma_0 < 2\pi + \sigma - \frac{d_{q_0}}{2}$$

which coupled with (26a) gives

$$\gamma > \frac{d_{q_0}}{4} - \frac{\sigma}{2}.$$

We now estimate σ from above as follows. First notice that its sine is small

$$\sin(\sigma) = \frac{|p_0 - q_0|}{1 - d_{q_0}} \sin(\alpha) \leq 4r_{\mathbf{j}} \leq 2^{-4}\varepsilon_{\mathbf{j}},$$

where the last inequality is guaranteed by (viii). Thus σ itself is small, i.e.

$$\frac{\sigma}{2} \leq \sigma - \frac{\sigma^3}{6} \leq \sin\sigma \leq 2^{-4}\varepsilon_{\mathbf{j}} \leq 2^{-3} d_{q_0},$$

eventually getting the lower bound

$$\gamma > \frac{d_{q_0}}{8}\,.$$

Since $|p-q| > |p_0-q_0|$, the angle γ is smaller than $\pi/2$, thus

$$0 \le \cos\gamma \le \cos\left(\frac{d_{q_0}}{8}\right) \le 1 - \frac{d_{q_0}^2}{2^7} + \frac{d_{q_0}^4}{3\cdot 2^{15}} \le 1 - \frac{d_{q_0}^2}{2^8}\,. \tag{27}$$

From (23), (25) and (27) it follows that

$$\begin{aligned}\delta P &\le 2\pi r_{\mathbf{j}} - 2|p-p_0| + |p-q| \\ &\le 2\pi r_{\mathbf{j}} - 2|p-p_0| + 2|p-p_0|\cos\gamma + 2r_{\mathbf{j}} \\ &\le 2r_{\mathbf{j}}(\pi+1) + \frac{d_{q_0}}{2^3}(\cos(\gamma)-1) \le 2r_{\mathbf{j}}(\pi+1) - \frac{d_{q_0}^3}{2^{11}}\end{aligned}$$

Since by (viii) we have $r_{\mathbf{j}} \le 2^{-18}\varepsilon_{\mathbf{j}}^3$ and $d_{q_0} \ge \varepsilon_{\mathbf{j}}/2$, we obtain

$$\frac{d_{q_0}^3}{2^{11}} \ge \frac{\varepsilon_{\mathbf{j}}^3}{2^{14}} \ge 16 r_{\mathbf{j}} > 2r_{\mathbf{j}}(\pi+1)\,,$$

thus $\delta P < 0$, a contradiction. This concludes the proof of the theorem. □

References

[1] F. Alter, V. Caselles, and A. Chambolle. Evolution of characteristic functions of convex sets in the plane by the minimizing total variation flow. *Interfaces Free Bound.*, 7(1):29–53, 2005.

[2] L. Ambrosio, N. Fusco, and D. Pallara. *Functions of Bounded Variation and Free Discontinuity Problems*. Oxford Mathematical Monographs, 2000.

[3] G. Anzellotti and M. Giaquinta. Funzioni BV e tracce. *Rend. Sem. Mat. Univ. Padova*, 60:1–21, 1978.

[4] G. Bellettini, V. Caselles, and M. Novaga. The total variation flow in $\mathbb{R}^N$. *J. Differential Equations*, 184(2):475–525, 2002.

[5] A. S. Besicovitch. Variants of a classical isoperimetric problem. *Quart. J. Math. Oxford*, 3(2):42–49, 1952.

[6] V. Caselles, A. Chambolle, and M. Novaga. Regularity for solutions of the total variation denoising problem. *Rev. Mat. Iberoamericana*, 27(1):233–252, 2011.

[7] J. Cheeger. A lower bound for the smallest eigenvalue of the Laplacian. In *Problems in analysis (Papers dedicated to Salomon Bochner, 1969)*, pages 195–199. Princeton Univ. Press, Princeton, N. J., 1970.

[8] M. Cicalese and G. P. Leonardi. A selection principle for the sharp quantitative isoperimetric inequality. *Arch. Rational Mech. Anal.*, 206(2):617–643, 2012.

[9] M. Cicalese and G. P. Leonardi. Best constants for the isoperimetric inequality in quantitative form. *J. Eur. Math. Soc.*, 15(3):1101–1129, 2013.

[10] H. T. Croft, K. J. Falconer, and R. K. Guy. *Unsolved Problems in Geometry*. Problem Books in Mathematics. Springer-Verlag, New York, 1994.

[11] H. Federer. *Geometric Measure Theory*. Die Grundlehren der mathematischen Wissenschaften, Band 153. Springer-Verlag New York Inc., New York, 1969.

[12] R. Finn. A subsidiary variational problem and existence criteria for capillary surfaces. *J. Reine Angew. Math.*, 353:196–214, 1984.

[13] R. Finn. *Equilibrium Capillary Surfaces*. Springer-Verlag New York Inc., New York, 1st edition, 1986.

[14] E. Giusti. On the equation of surfaces of prescribed mean curvature. *Invent. Math.*, 46:111–137, 1978.

[15] R. Hassani, I. R. Ionescu, and T. Lachand-Robert. Shape optimization and supremal minimization approaches in landslides modeling. *Appl. Math. Optim.*, 52(3):349–364, 2005.

[16] P. Hild, I. R. Ionescu, T. Lachand-Robert, and I. Roşca. The blocking of an inhomogeneous Bingham fluid. Applications to landslides. *M2AN Math. Model. Numer. Anal.*, 36(6):1013–1026 (2003), 2002.

[17] I. R. Ionescu and T. Lachand-Robert. Generalized Cheeger sets related to landslides. *Calc. Var. Partial Differential Equations*, 23(2):227–249, 2005.

[18] B. Kawohl and V. Fridman. Isoperimetric estimates for the first eigenvalue of the p-Laplace operator and the Cheeger constant. *Comment. Math. Univ. Carolin.*, 44(4):659–667, 2003.

[19] J.B. Keller. Plate failure under pressure. *SIAM Rev.*, 22:227–228, 1980.

[20] G. P. Leonardi. An overview on the Cheeger problem. In *New trends in shape optimization*, volume 166 of *Internat. Ser. Numer. Math.*, pages 117–139. Springer Int. Publ., 2015.

[21] G. P. Leonardi, R. Neumayer, and G. Saracco. The Cheeger constant of a Jordan domain without necks. *Calc. Var. Partial Differential Equations*, 56(6), 2017.

[22] G. P. Leonardi and A. Pratelli. On the Cheeger sets in strips and non-convex domains. *Calc. Var. Partial Differential Equations*, 55(1):Art. 15, 28, 2016.

[23] G. P. Leonardi and G. Saracco. The prescribed mean curvature equation in weakly regular domains. *NoDEA Nonlinear Differential Equations Appl.*, pages 1–29, 2018.

[24] V. Maz'ya. *Sobolev Spaces with Applications to Elliptic Partial Differential Equations*, volume 342. Springer-Verlag Berlin Heidelberg, 2nd edition, 2011.

[25] Mario Miranda. Superfici minime illimitate. *Ann. della Sc. Norm. Super. di Pisa*, 4(4):313–322, 1977.

[26] E. Parini. An introduction to the Cheeger problem. *Surv. Math. its Appl.*, 6:9–21, 2011.

[27] G. Saracco. Weighted Cheeger sets are domains of isoperimetry. *Manuscripta Math.*, pages 1–11, 2017.

[28] T. Schmidt. Strict interior approximation of sets of finite perimeter and functions of bounded variation. *Proc. Am. Math. Soc.*, 143(5):2069–2084, 2014.

[29] D. Singmaster and D. J. Souppuris. A constrained isoperimetric problem. *Math. Proc. Cambridge Phil. Soc.*, 83(1):73–82, 1978.

[30] J. Steiner. Sur le maximum et le minimum des figures dans le plan, sur la sphere et dans l'espace en general. *J. Math. Pures Appl.*, 6:105–170, 1841.

Dipartimento di Science Fisiche, Informatiche e Matematiche, Università degli Studi di Modena e Reggio Emilia, Via Campi 213/b, I-41125 Modena, ITALY

E-mail address: gianpaolo.leonardi@unimore.it

Department Mathematik, Universität Erlangen-Nürnberg, Cauerst. 11, D-91058 Erlangen, Germany

E-mail address: saracco@math.fau.de