We are IntechOpen, the world's leading publisher of Open Access books Built by scientists, for scientists

7,300
Open access books available

193,000
International authors and editors

210M
Downloads

154
Countries delivered to

Our authors are among the
TOP 1%
most cited scientists

14%
Contributors from top 500 universities

WEB OF SCIENCE™
Selection of our books indexed in the Book Citation Index in Web of Science™ Core Collection (BKCI)

Interested in publishing with us?
Contact book.department@intechopen.com

Numbers displayed above are based on latest data collected.
For more information visit www.intechopen.com

Chapter

Perspective Chapter: Methanol as a Fuel for Direct Methanol Fuel Cells (DMFCs) – Principles and Performance

Marcello Romagnoli and Veronica Testa

Abstract

Methanol, also known as methyl alcohol (CH_3OH), is a colorless, flammable, and volatile liquid produced commercially through the catalytic reaction of carbon monoxide and hydrogen or by gasification. Despite toxicity and serious health effects, methanol has recently gained attention as a feedstock for chemical synthesis, a solvent in industrial processes, an antifreeze agent, a potential solution for sustainable energy production, and as a potential alternative fuel for biofuel in automotive diesel engines in diesel vehicle applications. This is attributed to its notable energy density and convenient manageability when contrasted with hydrogen, a fuel more commonly employed in various other types of fuel cells. Proper handling and safety precautions are necessary when employing methanol as a fuel in direct methanol fuel cells (DMFCs) in portable electronic devices, backup power systems, and remote power generation applications. The performance of DMFCs is largely determined by the efficiency of the anode and cathode reactions, as well as the conductivity of the electrolyte. In the quest for more environmentally friendly and sustainable options, the uses of methanol are undergoing dynamic advancements, providing solutions that address both current energy demands and overarching environmental objectives.

Keywords: fuel cell, renewable energy, portable power, chemical conversion, methanol

1. Introduction

1.1 Fuel cell overview and environmental impact

Fuel cells are among the most promising systems for the production of electricity, with a view to replacing fossil fuels and reducing emissions. A fuel cell is an electrochemical device that converts the chemical energy of a fuel (generally hydrogen, methanol, or methane) and an oxidant (oxygen or air) into electrical energy. The main components of a fuel cell are two porous electrodes, anode (negative) and cathode (positive), and an electrolyte (**Figure 1**). Fuel cells operate based on the

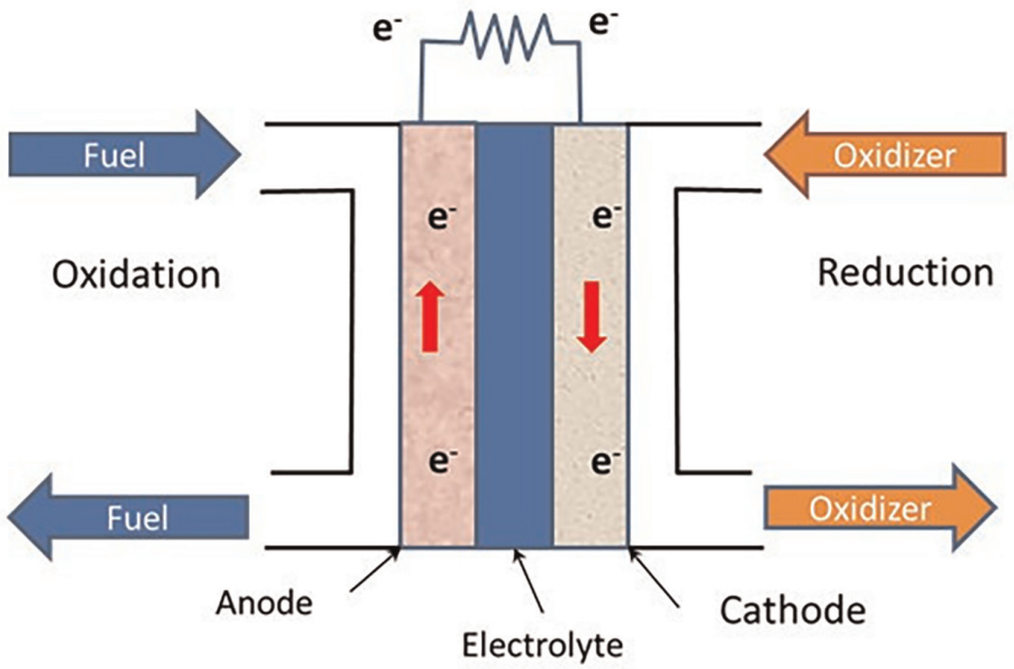

Figure 1.
Fuel cell schematic layout.

principle of reverse electrolysis: electrodes act as catalytic sites for cell reactions that basically consume hydrogen and oxygen, with water production and electric current passage in the external circuit. The electrolyte has the function of conducting the ions produced by one reaction and consumed by the other, closing the electrical circuit inside the cell [1]. At the anode, the fuel is oxidized, releasing electrons and producing protons as byproducts. The electrons flow through an external circuit, generating electrical power, and then return to the cathode where the oxidant is reduced.

A single cell normally produces a voltage of about 0.6, 7 V and currents between 300 and 800 mA/cm^2, so to obtain the desired power and voltage, multiple cells are arranged in series, by means of bipolar plates, to form the so-called "stack" [2]. The stacks are assembled in modules, to obtain generators of the required power in industrial applications. Potential applications include transportation (cars, busses, trucks, and trains), portable devices such as laptops or smartphones, stationary power generation, backup power for buildings, military and marine applications, and aerospace equipment. Fuel cells have several advantages over conventional power sources, such as internal combustion engines (**Figure 2**). They are highly efficient, with some types of fuel cells achieving efficiencies of up to 60% or more. They also emit no harmful pollutants, with water being the only byproduct of the reaction. Despite ongoing technical and economic challenges, fuel cell technology is expected to continue to advance and become more widely adopted in the coming years [3].

The widespread use of fuel cells has several environmental benefits that can contribute to the reduction of environmental risks compared to conventional gasoline systems and hybrids, through improved efficiency [4]. First, fuel cells produce electricity with high efficiency, resulting in less waste heat compared to combustion engines. This reduces the energy lost as heat, leading to lower greenhouse gas emissions and a reduced carbon footprint. Therefore, fuel cells can help mitigate the risks of climate change. Second, fuel cells produce minimal emissions of pollutants, such as carbon dioxide (CO_2), nitrogen oxides (NO_x), carbon monoxide (CO), sulfur oxides

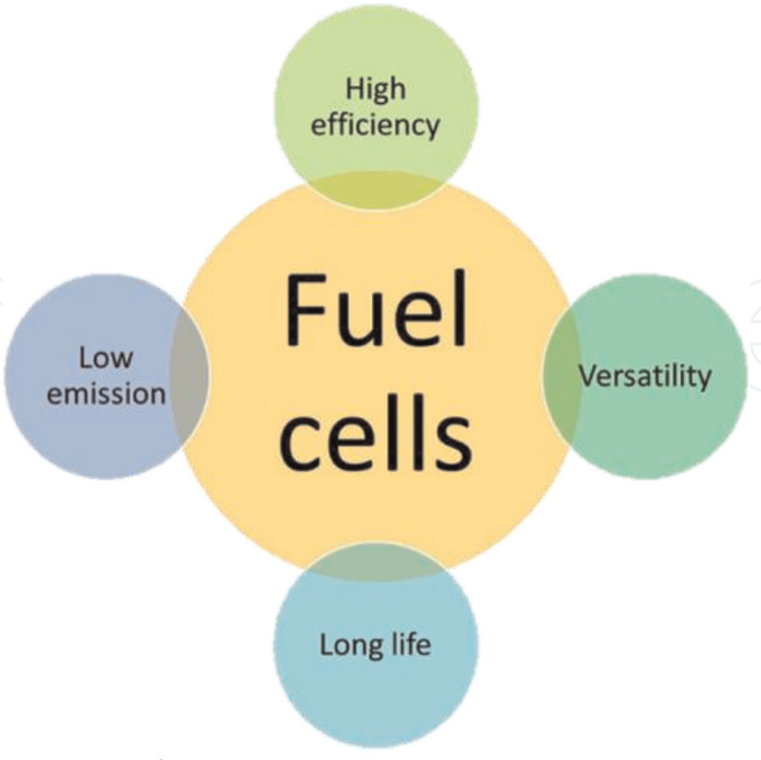

Figure 2.
Fuel cell advantages.

(SO_x), and particulate matter (PM), especially when using hydrogen as a fuel since the only byproduct is water [5]. Even when using other fuels such as methanol, natural gas, gasoline, or diesel, fuel cells produce lower emissions from vehicles compared to conventional combustion technologies (**Figure 3**): reduced carbon

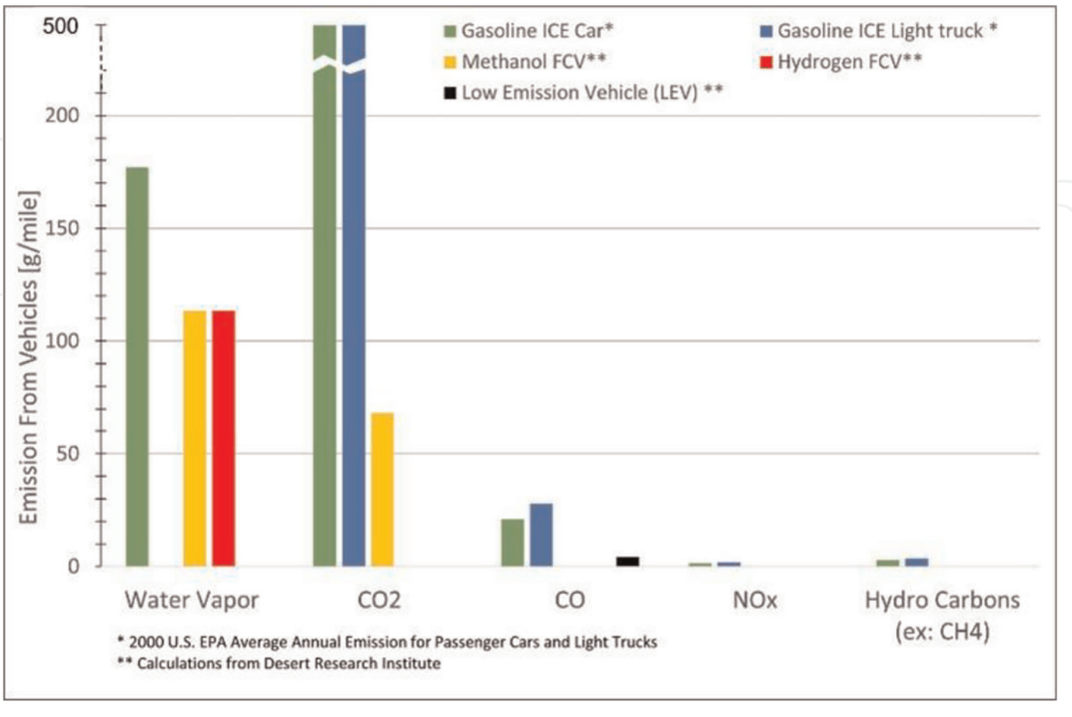

Figure 3.
Environmental impact of emissions from vehicles.

emissions are crucial to developed countries or regions in their efforts to meet target greenhouse gas emissions or reduce their carbon footprints [6].

As a result, fuel cells can contribute to reducing air pollution and associated environmental risks. Pollution is the most dangerous risk for the life on the earth. Fuel cells can help reduce the dependence on fossil fuels and associated environmental risks such as oil spills and air pollution from refineries. This is achieved by using renewable fuels such as hydrogen produced from renewable sources [7]. Fuel cells are cleaner, more efficient, and better suited for applications where clean, reliable power is required. Finally, fuel cells facilitate the development of a circular economy [8], by efficiently using waste streams. They can convert biogas from landfills or wastewater treatment plants into electricity, reducing waste disposal while generating useful energy [9].

2. Methanol fuel cell

Methanol fuel cells operate on the same principle as other types of fuel cells. However, they use methanol as a fuel instead of hydrogen and a polymer electrolyte membrane (PEM) to conduct the protons (hydrogen ions) that are generated during the electrochemical reaction.

2.1 Working principle

In a methanol fuel cell, the methanol is oxidized at the anode in the presence of a platinum-ruthenium (Pt-Ru) catalyst. This results in the production of hydrogen ions, electrons, carbon dioxide, and water. The hydrogen ions are then transported through sulfonated tetrafluoroethylene-based fluoropolymer-copolymer (which is most well known by the commercial name "Nafion®") to the cathode, where they combine with oxygen and electrons to produce water, releasing electrical energy that can be used to power devices [10]. The electrons are forced to flow through an external circuit, generating electric current, while the PEM prevents the direct mixing of the fuel and oxidant [1, 11]. The use of methanol as a fuel in fuel cells offers several advantages over other fuels such as hydrogen. Methanol is a liquid at room temperature, making it easier to transport, handling, and store. Methanol is also less expensive than hydrogen and can be produced from renewable energy sources or biomass. Besides, the high-energy density and the methanol's environmentally friendly property make methanol an attractive, safer, and less polluting alternative to other fuels [12]. Additionally, the use of hydrogen requires careful handling and storage, which can add to the overall system cost, and a longer start-up time.

Methanol fuel cells are still in the early stages of development, and researchers are working to improve the efficiency of methanol fuel cells and reduce their manufacturing cost [13]. One area of research is in developing new types of catalysts that are more efficient and less expensive than platinum-based catalysts. Another area of research is in developing new methods for producing and storing methanol fuel that are more sustainable and environmentally friendly. They are well suited for portable applications, such as powering electronic devices and small vehicles. They can also be used as backup power for critical infrastructure, such as telecommunications equipment and emergency response systems [14].

Methanol fuel cells can use methanol as fuel directly or indirectly. In an indirect system, methanol is first converted to hydrogen and carbon dioxide through a

	Electrical efficiency [%]	Operating temperature [°]
DMFC	20–30	70–90
IMFC	35–50	70–90 Low Temperature Polymer Electrolyte Membrane (LT-PEM) 160–200 High Temperature Polymer Electrolyte Membrane (HT-PEM)

Table 1.
Electrical efficiency and operating temperature of direct and indirect methanol fuel cells.

catalytic process called methanol reforming. Overall, the choice between a direct or indirect methanol fuel cell depends on the specific application and the trade-offs among simplicity of system design, electrical efficiency, cost, and operating temperature (**Table 1**).

2.2 Direct methanol fuel cells (DMFCs)

Direct methanol fuel cells (DMFCs) are attractive for portable applications due to their high density but most research works have focused on fundamental issues of internal components, such as membranes and catalysts. The direct generation of electricity from methanol and oxygen supplied from external tanks simplifies the system design without the need for an external reformer to convert the fuel into hydrogen.

Figure 4 shows a schematic representation of DMFC, in which the overall chemical reaction involved is given in Eq. (1).

$$2\,CH_3OH + 3O_2 \rightarrow 4\,H_2O + 2\,CO_2 \qquad E^0 = 1.21\,V \qquad (1)$$

The overall chemical reaction can be divided into two half-reactions. At the anode, oxidation occurs, as given in Eq. (2).

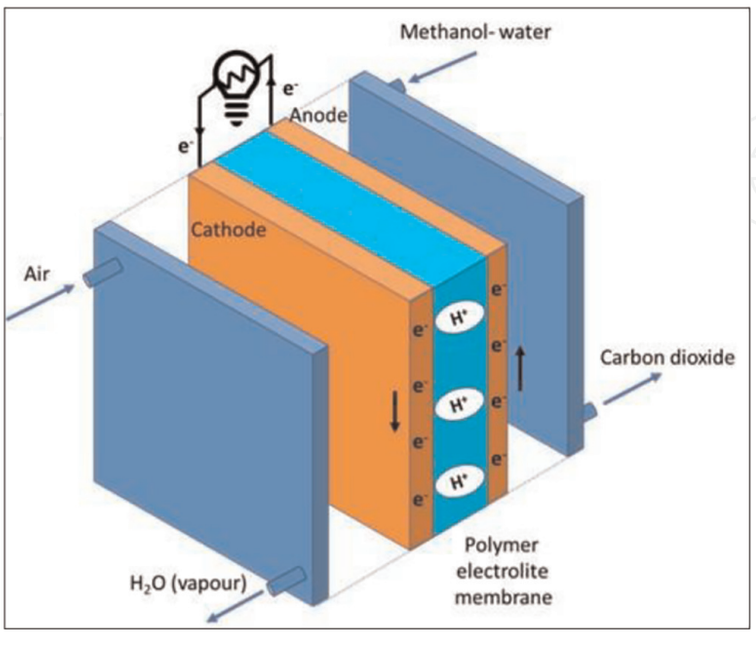

Figure 4.
Schematic illustration of a direct methanol fuel cell (DMFC).

$$2CH_3OH + 2H_2O \rightarrow 12H^+ + 12e^- + 2CO_2 \tag{2}$$

While at the cathode, reduction takes place, as given in Eq. (3).

$$O_2 + 12H^+ + 12e^- \rightarrow 6H_2O \tag{3}$$

Some of the advantages of a DMFC include:

- Simple and compact system design.
- Few minutes for start-up time.
- Widely used and well established for low-power applications.
- High-energy density.
- Low emission of pollutants.

The methanol must first diffuse through the anode to reach the catalyst layer, where it is oxidized to produce protons and electrons. The protons then pass through the membrane to the cathode, where they react with oxygen to produce water. The time required for the methanol concentration at the anode to reach the optimal level can affect the start-up time of the DMFC. It means that the start-up time can vary depending on several factors, such as the fuel cell design, the methanol concentration, and the operating temperature. However, a DMFC requires high purity methanol, and the membrane can become susceptible to damage when exposed to subzero temperatures due to the formation of ice crystals, which presents challenges for methanol storage. Finally, direct methanol fuel cells can be classified into two primary types: passive and active, which are different in terms of the power output and components. Passive fuel cells generate power through the natural flow of liquid methanol through the cell, while active fuel cells use a pump to circulate the methanol to the anode. The pump is used to regulate the methanol flow rate, ensuring that the fuel is delivered to the anode at a consistent rate.

The control system monitors the fuel cell and adjusts the pump speed and methanol concentration to maintain optimal performance. In this way, active fuel cells can achieve higher power densities than passive fuel cells. The choice of which type to use depends on the specific application requirements and the trade-off between performance and cost. Passive DMFCs are typically used in low-power applications such as portable electronic devices, while active DMFCs are used in high-power applications such as vehicles and backup power systems [15].

2.3 Indirect methanol fuel cells (IMFCs)

As described above, the employed fuel is hydrogen produced by methanol process in a reformer system (**Figure 5**) that decomposes methanol into hydrogen and carbon dioxide. Afterward, the hydrogen is purified and directed to the anode of the fuel cell, whereas the carbon dioxide is either recycled or discharged. In Eq. (4), the overall electrochemical reaction is explained.

$$CH_3OH + H_2O \rightarrow 3\,H_2 + CO_2\ (Reformer)\ 2\,H_2 + O_2 \rightarrow 2\,H_2O \tag{4}$$

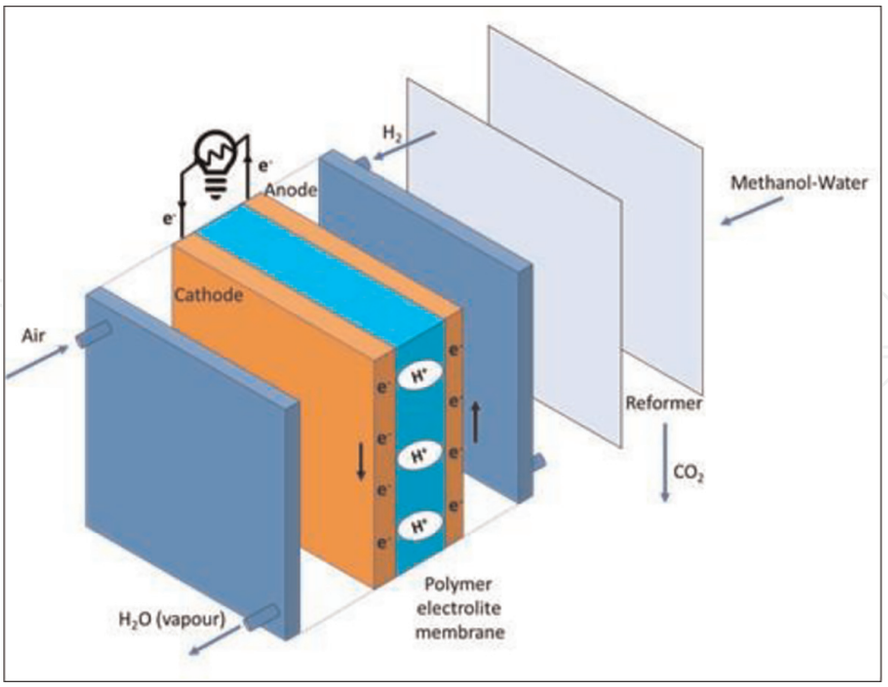

Figure 5.
Schematic illustration of indirect methanol fuel cell (IMFC).

The main advantage of the IMFC is that the use of hydrogen can increase the efficiency (see **Table 1**) of the fuel cell, compared to a direct system.

The high efficiency and the possibility of cold storage, as there is no contact with the membrane, are the reasons why IMFCs are widely used, despite more complex system design and higher costs. The start-up time of an IMFC can be affected by various factors, such as the reformer design, the hydrogen concentration, and the operating temperature. Since hydrogen diffuses faster than methanol, it reaches the catalyst layer more quickly, leading to a faster start-up time. During start-up, the hydrogen concentration at the anode is relatively high, which allows for more rapid oxidation and proton production [15].

3. Performance of direct methanol fuel cells

Since direct methanol fuel cells are not the only type, or even the most well known, it is common for their performance to be compared to that of other fuel cells, especially those that use hydrogen (H_2). Some of the parameters considered include energy density, lifetime, environmental impact, capital expenditure (CapEx) and operational expenditure (OpEx) cost, and flexibility of use, among others.

3.1 Efficiency of methanol fuel cells (MFCs)

The thermodynamic theoretical energy conversion efficiency (η_{th}) is defined as the ratio between the free energy (ΔG) and the chemical energy (enthalpy ΔH) of the fuel cell (Eq. (5)).

$$\eta_{th} = \frac{\Delta G}{\Delta H} \tag{5}$$

The η_{th} value of a direct methanol fuel cell (DMFC) at 25°C reaches 97% [16], when the η_{th} value for the H_2 stops at 83% [17]. The practical energy efficiency, however, is much lower. For the DMFC, it is given by Eq. (6). The voltaic efficiency $\eta_{voltaic}$ is defined by Eq. (7), where V_{cell} is the cell voltage at an operating current density of I and ΔE the thermodynamic equilibrium potential. The η_{fuel}, in a DMFC, is fuel efficiency due to methanol crossover defined as Eq. (8), where $I_{x,\ over}$ is an equivalent current density caused by methanol crossover under the operating current density of I [18].

$$\eta = \eta_{th}\eta_{voltaic}\eta_{fuel} \tag{6}$$

$$\eta_{voltaic} = \frac{V_{cell}}{\Delta E} \tag{7}$$

$$\eta_{fuel} = \frac{I}{I + I_{x,over}} \tag{8}$$

The phenomenon will be described in more detail later in Chapter 4. Based on these reasons, the energy conversion efficiency achievable in current operational cells ranges from 20 to 30% [19].

3.2 Power output of methanol fuel cells

The thermodynamic equilibrium cell potential for a DMFC is 1.21 V, which is higher than the actual open circuit voltage, typically lower than 0.9 V, mainly due to the factors such as the irreversible adsorption of methanol-derived intermediate species at the anode and fuel crossover [18, 20]. This last issue arises due to the permeability of current perfluorosulfonic acid membranes, which function as the electrolyte in DMFCs, to methanol. As a consequence, fuel crossover occurs, resulting in reduced performance and limiting the utilization of aqueous mixtures with high methanol concentrations. The primary reason behind this limitation is the easy miscibility of methanol with water, causing it to diffuse into the water that forms an integral part of the electrolyte structure. The methanol that reaches the air cathode, which has a platinum catalyst, is oxidated. The reaction is a waste of fuel and the loss of methanol is often expressed as a "crossover current": the current equivalent to that which would be produced by the methanol if it had reacted properly on the anode [1]. As current flows out of cells, the closed-circuit voltage is further reduced and changes with variations in current density. This behavior is graphically depicted in the polarization curve for DMFC, illustrated in **Figure 6**—DMFC polarization curve. It serves to demonstrate the relationship between cell voltage and current density, facilitating the analysis of DMFC's performance, including its inherent limitations. Notably, the polarization curve exhibits higher voltage values at lower current densities, gradually diminishing as the current increases. Typically, it can be classified into three distinct regions: activation, ohmic, and mass transport. In the activation region, characterized by low current density, the voltage decreases as the current density increases. This phenomenon can be attributed to the sluggish kinetics of methanol oxidation at the anode and oxygen reduction at the cathode. The anode reaction exhibits poor electrode kinetics, especially at lower temperatures. Consequently, the utilization of enhanced catalysts and higher operating temperatures becomes necessary to improve the reaction kinetics. The cathode reaction, involving oxygen reduction, also suffers from sluggish kinetics, although it is comparatively less problematic than with

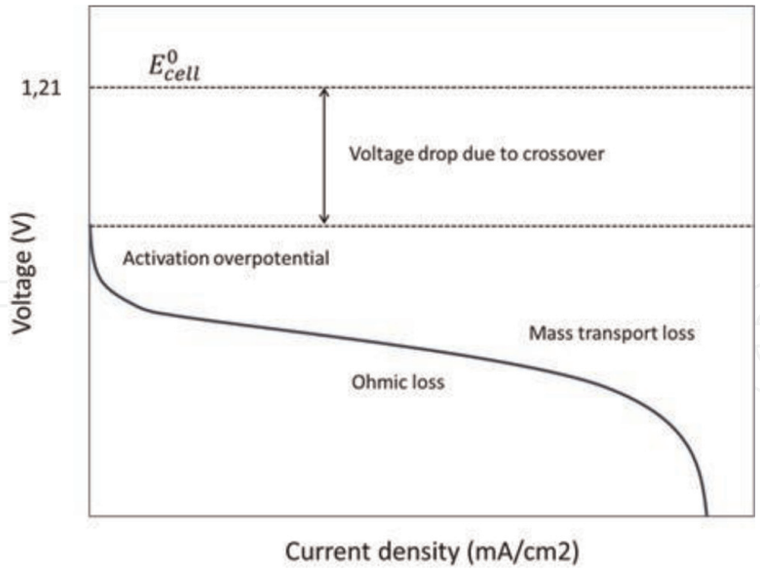

Figure 6.
Direct methanol fuel cell (DMFC) polarization curve.

aqueous mineral acid electrolytes. This voltage loss due to sluggish kinetics is second only to that caused by crossover [21].

The intermediate region, characterized by moderate current densities, is known as the ohmic control region. In this interval, the voltage exhibits an almost linear decrease. This behavior is primarily attributed to the electrical resistances encountered within the fuel cell, including the electrodes, electrolyte, and cell connections. The voltage drop in this region follows Ohm's law, which relates the voltage to the current and resistance within the system. In the last region, where current densities are high, mass transport resistance is the dominant factor. As a result, the cell's potential decreases rapidly when the concentration of one of the reactants approaches zero at the corresponding catalyst layer. This behavior is not unique to DMFCs but is inherent to all fuel cells, albeit with varying values, as the underlying phenomena influencing the potential curve are universally present. Nevertheless, modern DMFCs have demonstrated notable performance with power densities surpassing 300 $mWcm^{-2}$ when utilizing oxygen and 200 $mWcm^{-2}$ in air under pressure. It is important to note that these power densities are considerably lower than those achieved by hydrogen-fueled fuel cells. Despite these challenges, DMFCs hold the potential to be highly cost-effective and competitive with internal combustion engines in various applications [21].

3.3 Comparison with other fuel cell types

Direct methanol fuel cells offer several advantages compared to other types of fuel cells, including ease of fuel delivery and storage, low cost of methanol, operation at low temperature and pressure, absence of humidification requirements, and reduced design complexity (**Table 2**).

Methanol, being a liquid with properties like conventional fuels, can be stored in tanks at ambient pressure, resembling the setup of a gasoline tank. Refueling a DMFC vehicle is comparable to traditional methods in terms of time and procedure. Unlike hydrogen, methanol does not require high-pressure storage tanks, reducing the need for energy-intensive compression. Methanol can be produced through synthesis,

Fuel	Fuel cell type	Thermodynamic theoretical energy conversion efficiency (H_{TH})	Real energy conversion efficiency (H_{TH})	Operating temperature (°K)	Applications
Hydrogen	PEMFC	83%	40–60%	325–355 [22]	Backup power Portable power Distributed generation Transportation Specialty vehicles
	Alkaline Fuel Cell (AFC)		60%	325–475 [22]	Transportation, space travel
	Phosphate Acid Fuel Cell (PAFC)		40%	465–485 [22]	Combined Heat and Power (CHP), power plants
	Molten Carbonate Fuel Cell (MCFC)		50%	875–925 [22]	CHP, power plants
	SOFC		50%	875–1275 [22]	CHP, power plants
Methanol	DMFC	97%	20–30%	355–475 [22]	Transport, mobile equipments

Table 2.
Fuel cells comparison chart.

involving the reaction between CO_2 and H_2, or through biosynthesis, involving the reaction between CH_4 and O_2. The reaction taking place within the DMFC generates CO_2 and H_2O as byproducts. When produced via synthesis, DMFCs do not contribute to the increase of carbon dioxide in the atmosphere. Unlike polymer electrolyte membrane fuel cells (PEMFCs) or solid oxide fuel cells (SOFCs), DMFCs do not require external or internal reforming processes, as they can utilize the organic compound directly. The challenges include the lower efficiency and power density, as well as the higher cost of DMFCs compared to H_2-based fuel cells.

4. Challenges and solutions

4.1 Methanol crossover

As mentioned earlier, the phenomenon of methanol crossover refers to its transfer from the anode to the cathode, through the electrolyte membrane. At the cathode, it comes into direct contact with atmospheric oxygen and undergoes oxidation. This process leads to several disadvantages, including a decrease in cell voltage, lower current density compared to the maximum theoretical value, and fuel consumption without corresponding electricity production. It contributes to the fact that only approximately 30% of the energy that can be released from methanol, based on the aforementioned reactions, can be converted into electrical energy [23, 24]. Multiple physical and chemical factors exert influence over methanol crossover [25]. Among

the former, noteworthy physical parameters include temperature, pressure, membrane thickness, and current density. As for the chemical parameters, the concentration of methanol in the anode plays a significant role: it increases with increase in the amount of methanol fraction at the anode and the current generated by the cell [26]. Numerous studies have demonstrated that an elevated temperature leads to an increased crossover phenomenon. However, the overall impact on the cell's total efficiency due to temperature variation is intricate. In reality, crossover is a composite result of diffusion and proton drag. Diffusion tends to diminish as current density rises, whereas an escalation in proton drags results in a decline in the methanol concentration at the anode. Conversely, if the methanol concentration is maintained constant at the anode/membrane interface, proton drag intensifies as a greater amount of protons is generated through oxidation reactions [25].

4.2 Catalyst poisoning

Catalyst poisoning poses a significant challenge for platinum group metal catalysts utilized in DMFCs. During the alcohol oxidation process, carbon monoxide (CO) molecules, generated as reaction intermediates, can hinder the reaction by obstructing the active sites. This problem can be mitigated by using binary catalysts, i.e., Pt-Ru.

Additionally, the accumulation of carbon dioxide on the cathodic surface can lead to the formation of bubbles, blocking the flow channels and reducing the effective surface area of the electrode, thereby limiting the performance of the fuel cell [27].

Although platinum (Pt) is commonly employed as a catalyst in DMFCs, it is prone to catalyst poisoning caused by carbonaceous species, resulting in reduced DMFC performance.

The detrimental effects of methanol poisoning at the cathode can be mitigated by increasing the oxygen partial pressure, which promotes the oxidation of carbon monoxide to carbon dioxide. Additionally, this increased oxygen stoichiometry helps to counteract the adsorption of methanol and facilitates the physical removal of the aqueous solution of alcohol that permeates through the membrane, along with the water formed by the reaction. This preventive measure helps prevent electrode flooding. Compared to other fuel cells, DMFCs are more susceptible to cathode flooding due to the significant contribution of liquid water and methanol to the anode [28]. The use of binary or ternary catalysts in DMFC has also been studied in several research articles. These catalysts are commonly used due to their high catalytic activity for methanol oxidation reaction (MOR) [29, 30].

Pt/Ru is a binary catalyst that has been shown to have high activity and stability for MOR in DMFCs. Moreover, the addition of Ru can improve the catalyst performance and durability by reducing the carbon monoxide poisoning effect and increasing the tolerance to methanol crossover [31]. Also, the cost of the fuel cell can be reduced. Optimizing the synthesis method, particle size, and support material can improve the performances of Pt/Ru catalysts [32]. Other binary and ternary catalysts, such as platinum/palladium (Pt/Pd) and Pt/Pd/Ru, have also been studied for their potential use in DMFCs [33, 34].

4.3 Electrode degradation

In addition to catalyst poisoning, other forms of catalyst deterioration can occur, causing more general electrode degradation. These include: dissolution and agglomeration [35].

In the specific working conditions experienced by DMFCs, conventional Pt-Ru catalysts can undergo dissolution on the anode side. The migration and accumulation of these elements at the cathode, as they pass through the electrolyte, have been observed. This phenomenon leads to a decrease in catalyst activity in both electrodes, resulting in reduced overall cell performance [36].

The catalyst particles used in DMFCs are of nanoscale dimensions to maximize the surface area per unit mass. This is crucial because catalytic reactions occur on the surface of these particles. However, due to various factors, these particles can agglomerate, increasing their size but reducing the total available surface area, thereby diminishing the cell's efficiency [37].

As seen in the previous paragraph, methanol crossover can cause catalyst poisoning and cathode degradation, resulting in reduced performance. Finally, during the electrochemical reactions in the DMFC, carbon dioxide can be produced at the anode. The accumulation of carbon dioxide can lead to the formation of bubbles, blocking the flow channels and reducing the active surface area of the electrode, thus limiting the fuel cell's performance [27, 38].

4.4 Membrane degradation

The membrane, which separates the anode and cathode compartments in a DMFC, can also undergo degradation. Exposure to methanol, high temperatures, and other operating conditions can cause membrane swelling, loss of mechanical strength, or chemical degradation. Membrane degradation can lead to increased methanol crossover, decreased proton conductivity, and reduced overall performance of the fuel cell. Several authors have observed that high methanol concentration leads to the thinning of the polymer membrane, which serves as the electrolyte, due to its solubility in alcohol. As the thickness of the electrolyte decreases, the crossover of methanol increases. Therefore, a high percentage of methanol introduced at the anode ultimately contributes to the decrease in cell performance. At elevated operating temperatures, the degradation rate of the membrane accelerates due to the development of pinholes in the membrane, combined with cathode degradation and delamination. Another cause of degradation is attributed to the stack assembly process. Specifically, the tightening process can cause damage due to the mechanical stresses exerted on the membrane. Among the strategies to mitigate this issue, various approaches can be considered: investigating different cross-linking procedures, incorporating reinforcements or nanoscale inorganic fillers into the membrane, and exploring alternative materials for constructing the electrolyte [35].

4.5 Strategies for improving performance

The main strategies to improve the performance of DMFCs involve addressing the issues mentioned earlier. By mitigating these challenges, significant enhancements can be achieved. Reducing the crossover phenomenon is one of the primary research directions pursued by various scientists.

One strategy is to use membranes that are less permeable to methanol, such as those using SPEEK (sulfonated polyether ether ketone), instead of the well-established sulfonated tetrafluoroethylene polymers [39, 40]. Enhancing the efficiency of the catalyst at the anode of the cell enables the improvement of methanol oxidation, thereby reducing the fuel permeation across the electrolyte membrane. Formulations incorporating Pt-Ru have exhibited promising efficiency. Other ongoing

investigations involve: catalyst particles with nanometric or even atomic-scale dimensions, as well as novel element alloys and supported materials [41, 42]; and adding ZrO_2 or a thin layer of palladium to the membrane. These methods are capable of reducing methanol crossover to a certain extent, but none can prevent methanol crossover completely [25].

Another approach is to operate at low fuel concentrations, thereby decreasing the driving force for methanol crossover [43]. It is crucial to acknowledge that a comprehensive reduction of crossover in DMFCs often requires a combination of these methods. This is because each approach focuses on distinct aspects of the crossover phenomenon. To mitigate electrode degradation in DMFCs, researchers are exploring various strategies, such as developing more efficient catalyst materials, improving membrane durability, and optimizing system designs to minimize methanol crossover and carbon dioxide accumulation. Ongoing research aims to enhance the long-term stability and performance of DMFC electrodes for their successful commercialization.

4.6 DMFC massive production aspects

A massive adoption of DMFC, in addition to addressing previously observed issues, necessitates a reduction in cell costs. The combined expense of the membrane electrode assembly (MEA) and bipolar plates constitutes just over 50% of the overall cost, whereas the cost associated with the balance of plant (BoP) is comparatively lower. Attention should be focused on these two former components to explore possibilities for reducing production costs [44]. Maximizing automation in the production process can facilitate cost reduction without compromising on product quality. A feasible manufacturing facility should apply catalytic inks on both the anodic and cathodic sides. Discontinuous methods such as slot-die coating have been associated with issues such as layer inhomogeneity, local delamination, recurring defects, and raw material waste. The slot-die coating technique is seen as having the potential to partially mitigate these problems [45–47]. It is utilized to apply the catalytic ink on the membrane, followed by the application and pressing of the gas diffusion layer (GDL), either through hot or through cold methods, to obtain the MEA. However, it is not the only technique under consideration. Other technologies, such as: tape casting; gravure printing [46]; bar coating; screen printing [48], air spraying, ultrasonic spray deposition, and inkjet printing, have been explored as promising methods for achieving continuous production [49]. In terms of bipolar plates, improvements can be achieved by pressing graphite powders with binders or by pressing sheets of steel or aluminum alloys [50]. Finally, the introduction of a high degree of automation on production lines is the third essential element. This would enable increased production quantities without compromising on product quality's variability. The automation lines should encompass MEA and bipolar plate production technologies, while also being capable of assembling stacks.

5. Applications of methanol fuel cells

5.1 Portable electronic devices

One prospective domain where direct methanol fuel cells (DMFCs) can be utilized is the provision of power to electrical and electronic devices. Several examples include charging mobile phones and laptops, supplying energy to portable medical devices employed in field hospitals, and powering motor homes. Additionally, DMFCs can

serve as auxiliary power units (APUs) for weather stations and radio repeaters located in areas lacking power infrastructure. DMFCs exhibit great potential for these applications due to their advantageous attributes, including high-energy density, lightweight design, compactness, simplicity, and convenient and rapid recharging capabilities [51].

In comparison to conventional lithium-ion rechargeable batteries, DMFCs offer distinct advantages. First, they possess a theoretically higher specific energy density of 6000 Wh/kg, surpassing the best rechargeable battery systems with a theoretical energy density of 600 Wh/kg [28]. This implies that DMFCs can store more energy per unit of weight. Additionally, they exhibit a significantly shorter charging time. While it takes hours to recharge batteries, the tank connected to the methanol cell's anode can be refilled in just a few minutes without interrupting the cell's electricity output. This rapid refueling capability sets DMFCs apart from batteries. Compared to PEMFCs, direct methanol fuel cells (DMFCs) have the advantage of not requiring the storage of hydrogen under pressure or in the form of hydrides. The latter can be replenished with H_2 but necessitate not only the availability of hydrogen gas but also a specific procedure. Ultimately, the average user may perceive hydrogen-based solutions as more hazardous and complex compared to those utilizing methanol. Regarding the hazardous nature of methanol, it is important to note that its level of danger is not significantly different from those of other conventional fuels such as gasoline, diesel, natural gas, or liquefied petroleum gas (LPG). There are already DMFC-based products available on the market, and there is a strong interest in developing new, more efficient, cost-effective, and long-lasting solutions [52].

5.2 Electric vehicles

An attempted indirect use of methanol involved combining it with a PEMFC through a reformer capable of converting alcohol into H_2 and CO_2. This approach appeared to be highly promising in the 1990s and early 2000s. Several major global vehicle manufacturers pursued this path but had to abandon it due to significant technical and economic challenges [51].

Material handling is another area of use for DMFCs. Forklifts find extensive application in logistical, industrial, and construction sectors. They are propelled by either electric motors or internal combustion engines, constituting the two primary propulsion methods. In the case of electric forklifts, power can be sourced from batteries or generated through fuel cells. Notably, in 2020, the number of electric forklift shipments exceeded twice the number of shipments for internal combustion engine (ICE) units. There are several advantages offered by a fuel cell electric system. The main advantage lies in the comparable charging times with traditional internal combustion engine (ICE) forklifts. Furthermore, in contrast to battery-powered electric forklifts, fuel cell systems maintain maximum operational efficiency as long as there is fuel in the tanks, without experiencing performance degradation due to battery charge depletion. Forklifts utilizing proton exchange membrane (PEM) fuel cells are the most prevalent in the market. However, they require infrastructure capable of supplying pressurized H_2, which needs to be stored in specifically designed areas with significant safety systems. Hydrogen can be purchased or internally generated through electrolyzers. In contrast, when using DMFCs, the supply of methanol poses fewer issues as it is a liquid similar to traditional fuel. It does not need to be stored under high pressure in dedicated tanks. Of course, all necessary precautions must be taken for handling a flammable and toxic fuel. Additionally, methanol cannot be produced

Characteristic	Efoy pro 12,000 duo [57]	Blue world [58]
Nominal voltage	24 VDC/48 VDC	38 to 60 VDC
Power output	500 W	5 kW
Charging current	20.83 A/10.42 A	
Weight	32.0 kg	530 kg
Warranty (operating hour)	3000	10,000
Nominal consumption	0.9 l/kWh	0.55 l/kWh
Dimensions D × W × H	640 × 441 × 310 mm	845 × 1433 × 1354 mm
Operating temperature	−20 to +50°C	−10 to +50°C

Table 3.
Technical specifications of some commercial DMFC power generators.

on-site, as is the case with H_2 when, for example, an electrolyzer is connected to a renewable energy source such as photovoltaic or wind power [53–55].

5.3 Power generation in remote areas

In remote areas, even where electricity is not available, it may be necessary to have DMFC to power systems such as radio repeaters and the Internet network; remote monitoring and land survey systems; navigation systems, etc.

In these applications, it is much more convenient to provide reliable off-grid energy via fuel cells than to establish an expensive and difficult grid connection or use photovoltaic panels that have insurmountable limitations when placed in areas with unfavorable weather conditions.

The use of classical portable batteries that provide the full amount of energy is problematic due to their need to be replaced or recharged. DMFC systems can provide the full amount of energy by combining them with a smaller amount of batteries capable of providing the energy to overcome peak demands [56].

There are DMFC-based systems on the market which are capable of delivering power that is not very high, but sufficient for various applications used in remote areas. Some characteristics are listed in **Table 3**.

Even in cases where the system is installed in remote areas, the operator has the ability to confirm the operational condition of the system by establishing a connection to the cloud server via a mobile phone network. Furthermore, it is worth noting that methanol aqueous solution is a safe substance that can be stored for extended periods without undergoing any degradation.

5.4 Potential applications

Direct methanol fuel cells can have interesting developments, especially if they will be able to reduce the disadvantages that have been described above. This would allow a higher power density and open up new applications. For example, it would allow them to be used for small electric cars, even as range extenders for battery electric vehicles (BEVs). Solutions have been proposed for small (Class III) forklifts for DMFC-powered mobile pick-ups. From a search on

the Internet, however, the company proposing the methanol system does not appear to have a website, so it is not possible to say whether they are still operational on the market [59–61].

Nevertheless, there are other companies offering DMFCs of comparable or even higher power. In particular, one of them also offers its systems for transport applications such as cars, trucks, and maritime transport. Methanol fuel cells are combined with batteries in hybrid configurations. The battery is very good for short high-power needs and the fuel cell for an extended need of energy [62].

While not directly related to DMFCs, it is worth mentioning alternative solutions that utilize methanol as a convenient hydrogen storage and transport system. In these systems, methanol is supplied to extract hydrogen for utilization in cells such as PEMFCs.

6. Methanol fuel cells for future

6.1 Advances in methanol fuel cell technology

As described above, DMFCs suffer from the slow kinetics of methanol oxidation reactions. To reduce this problem, expensive Pt-based catalysts are introduced at both the anode and cathode, making them unsuitable for large-scale commercialization. The noble metal loading of up to 4 mg cm^{-2} on the anode is too much expensive for a lot of applications. The anode catalyst activity has to be increased by a factor of at least 10 to be able to reduce the noble metal loading to a more reasonable 0.5 mg cm^{-2} [63].

Another line of solution is to develop lower Pt and non-Pt catalysts. Low-Pt alloys and core-shell-like catalysts have yielded important results. The latter are nanomaterials that have a structure consisting of a central part, the inner core material, surrounded by a shell material. They can provide performance superior to that of the generally applied conventional catalysts [64, 65]. Heat-treated Pd-Me, Ru-Se, and MeNxCy-based Pt-free catalysts are also being investigated. Methanol crossover limitation is a significant challenge in DMFCs. Improving DMFC performance would be greatly beneficial, if either a methanol-impermeable electrolyte or a methanol-tolerant cathode is available. Extensive research has focused on exploring alternative membrane materials to minimize methanol crossover effects. However, current electrolyte materials face water management issues, which restrict their operation to temperatures below 100°C at ambient pressures. Increasing the operating temperature to 150°C would significantly enhance the kinetics of the anode reaction. This necessitates the development of new materials that exhibit high conductivity without the need for humidification [63].

6.2 Market prospects for methanol fuel cells

The DMFC market is moderately consolidated and is expected to show substantial growth during the period 2022–2027, owing to a strong demand for electronics coupled with the need for clean energy. In particular, the compounded average growth rate expected is more than 13% during this period of time. China, Japan, India, and other countries in Asia-Pacific are expected to dominate the direct methanol fuel cell market. North America's and European DMFC markets are poised for growth until 2030. The region benefits from capital-intensive companies and substantial investments in product launches. A positive economic outlook, along with focused

marketing efforts, will bolster the market. The market for direct methanol fuel cells in Latin America is expected to exceed earlier growth projections, driven by strong domestic demand and a rise in export activities. However, inflation and high-interest rates may impact negatively. Middle East countries' focus on economic diversification drives strong demand for DMFCs. United Arab Emirates (UAE), Saudi Arabia, and other nations offer promising prospects, along with selected African countries, for companies in this sector [66]. The main industries that employ DMFCs include the electronics, automotive, and industrial sectors. DMFCs have diverse applications due to their higher energy density compared to traditional lithium-ion batteries and the great ease of storage of methanol compared to H_2. This particular feature is anticipated to make a significant contribution to the growth and advancement of the global market [67]. In order to overcome technical and economic limitations, there is an increase in Research & Development (R&D) investments that should lead to significant improvements. It's important to underline that while methanol fuel cells produce fewer emissions than traditional power sources, such as gasoline-powered generators, the production and use of methanol fuel can still have an environmental impact [68].

7. Conclusion

Methanol (CH_3OH) is the simplest organic alcohol, consisting of one carbon, four hydrogen, and one oxygen atom. It is a promising fuel for future energy systems due to its high-energy density, ease of production from renewable energy sources or biomass, and easy storage and transportability. Methanol is typically not only produced from fossil fuels, such as natural gas, which can contribute to greenhouse gas emissions, but it can also be produced from sustainable biomass, often called biomethanol, or from carbon dioxide and hydrogen produced from renewable electricity. In these last cases, methanol can be considered as environmentally friendly for the planet.

In comparison to other types of fuel cells, DMFCs offer various benefits, including their ability to function at low temperatures and their simplicity and compactness.

The fundamental working principle of a DMFC involves the electrochemical oxidation of methanol at the anode, resulting in the production of protons, electrons, and carbon dioxide. The protons flow through a proton exchange membrane to the cathode, while the electrons generate an electric current through an external circuit. At the cathode, airborne oxygen combines with the protons and electrons to produce water. One of the major advantages of DMFCs is their ability to utilize liquid fuel, making storage and transport simpler than other fuel cell types. Additionally, their simple design results in a more compact and lightweight system. However, DMFCs are limited by the lower energy density of methanol in comparison to hydrogen, which can impact their performance. Additionally, the overall energy efficiency of DMFCs is lower than that of other fuel cell types, such as polymer electrolyte membrane fuel cells (PEMFCs). Research efforts undertaken on DMFCs are focused on enhancing their efficiency, durability, and cost-effectiveness to improve their competitiveness as a power source. This includes exploring new catalyst materials, improving the design of the fuel cell components, and developing new techniques for producing and storing methanol fuel. For example, researchers are investigating the use of higher methanol concentrations and alternative materials, such as nanomaterials, as catalysts to improve DMFC performance. Additionally, efforts are underway to develop more effective and efficient methods for producing and storing methanol fuel. Despite the

limitations of DMFCs, they offer several benefits over other fuel cell types and have the potential to be a promising technology for both portable and stationary power applications. Further research and development are necessary to fine-tune their performance and make them more competitive with other power sources.

IntechOpen

IntechOpen

Author details

Marcello Romagnoli* and Veronica Testa
Department of Engineering "Enzo Ferrari", Interdepartmental Center for Research and Services in the field of Production, Storage and Utilization of Hydrogen H2-MO.RE, University of Modena and Reggio Emilia, Modena, Italy

*Address all correspondence to: marcello.romagnoli@unimore.it

IntechOpen

© 2023 The Author(s). Licensee IntechOpen. This chapter is distributed under the terms of the Creative Commons Attribution License (http://creativecommons.org/licenses/by/3.0), which permits unrestricted use, distribution, and reproduction in any medium, provided the original work is properly cited. CC BY

References

[1] Dicks AL, Rand DAJ. Fuel Cell Systems Explained. Hoboken, New Jersey, U.S: John Wiley & Sons; 2018. pp. 69-133. DOI: 10.1002/9781118706992

[2] Perry ML, Fuller TF. A historical perspective of fuel cell technology in the 20th century. Journal of the Electrochemical Society. 2002;**149**:S59. DOI: 10.1149/1.1488651

[3] Ulf B, Schönbein CF, GWR. The birth of the fuel cell 1835-1845. Lucerne, Switzerland: European Fuel Cell Forum; 2000

[4] McCarthy R, Yang C. Determining marginal electricity for near-term plug-in and fuel cell vehicle demands in California: Impacts on vehicle greenhouse gas emissions. Journal of Power Sources. 2010;**195**:2099-2109. DOI: 10.1016/j.jpowsour.2009.10.024

[5] Upadhyaya J, Peters RW, Fouad FH, Ahluwalia RK, Doss ED, Das T. Environmental impact of fuel cell technology for electric power generation: An overview and case studies. In: Proceeding in AIChE Annual Meeting, Austin, Texas; 2004

[6] Damm C, Strobach E, Robbins C, Broch A, Turner R, Hoekman SK. Development of the renewable energy deployment and display (REDD) facility at the Desert Research Institute-volume 2 of energy sustainability. In: ASME 2014 12th International Conference on Fuel Cell Science, Engineering and Technology, Jun 30-Jul 2, 2014. Boston, Massachusetts, USA: American Society of Mechanical Engineers; 2014. DOI: 10.1115/ES2014-6626

[7] Megía PJ, Vizcaíno AJ, Calles JA, Carrero A. Hydrogen production technologies: From fossil fuels toward renewable sources. A mini review. Energy & Fuels. 2021;**35**:16403-16415. DOI: 10.1021/acs.energyfuels.1c02501

[8] Ahmed AA, Nazzal MA, Darras BM, Deiab IM. A comprehensive sustainability assessment of battery electric vehicles, fuel cell electric vehicles, and internal combustion engine vehicles through a comparative circular economy assessment approach. Sustainability. 2022;**15**:171. DOI: 10.3390/su15010171

[9] Osman AI, Mehta N, Elgarahy AM, Hefny M, Al-Hinai A, Al-Muhtaseb AH, et al. Hydrogen production, storage, utilisation and environmental impacts: A review. Environmental Chemistry Letters. 2022;**20**:153-188. DOI: 10.1007/s10311-021-01322-8

[10] Heinzel A, Barragán VM. A review of the state-of-the-art of the methanol crossover in direct methanol fuel cells. Journal of Power Sources. 1999;**84**:70-74. DOI: 10.1016/S0378-7753(99)00302-X

[11] Shripad T, Revankar PM. Fuel Cells: Principles, Design, and Analysis. Boca Raton, Florida: CRC Press; 2014

[12] Schulze Lohoff A, Günther D, Hehemann M, Müller M, Stolten D. Extending the lifetime of direct methanol fuel cell systems to more than 20,000 h by applying ion exchange resins. International Journal of Hydrogen Energy. 2016;**41**:15325-15334. DOI: 10.1016/j.ijhydene.2016.06.207

[13] Barbera O, Stassi A, Sebastián D, Baglio V, Aricò AS. Direct Methanol Fuel Cell Stack Design and Test in the Framework of DURAMET Project. Vol. 93. Switzerland: Advances in Science and

Technology; 2014. pp. 65-69. DOI: 10.4028/www.scientific.net/AST.93.65

[14] Yuan Z, Zhang Y, Fu W, Li Z, Liu X. Investigation of a small-volume direct methanol fuel cell stack for portable applications. Energy. 2013;**51**: 462-467. DOI: 10.1016/j.energy.2012.12.033

[15] Kamarudin SK, Achmad F, Daud WRW. Overview on the application of direct methanol fuel cell (DMFC) for portable electronic devices. International Journal of Hydrogen Energy. 2009;**34**: 6902-6916. DOI: 10.1016/j.ijhydene.2009.06.013

[16] Brett DJL, Manage M, Agante E, Brandon NP, Brightman E, Brown RJC, et al. Fuels and fuel processing for low temperature fuel cells. In: Hartnig C, Roth C, editors. Polymer Electrolyte Membrane and Direct Methanol Fuel Cell Technology. Volume 1: Fundamentals and Performance of Low Temperature Fuel Cells. Sawston, Cambridge: Woodhead Publishing Limited; 2012

[17] Vielstich W. Ideal and effective efficiencies of cell reactions and comparison to Carnot cycles. In: Handbook of Fuel Cells–Fundamentals, Technology and Applications. Hoboken, New Jersey, U.S: John Wiley & Sons; 2010

[18] Lu G, Wang CY. Two-phase microfluidics, heat and mass transport in direct methanol fuel cells. In: Transport Phenomena in Fuel Cells. Billerica, Massachussetts, USA: WIT Press; 2005. pp. 317-358. DOI: 10.2495/1-85312-840-6/09

[19] Glüsen A, Müller M, Stolten D. 45% cell efficiency in DMFCs via process engineering. Fuel Cells. 2020;**20**:507-514. DOI: 10.1002/fuce.201900234

[20] Joghee P, Malik JN, Pylypenko S, O'Hayre R. A review on direct methanol fuel cells–in the perspective of energy and sustainability. MRS Energy & Sustainability. 2015;**2**:3. DOI: 10.1557/mre.2015.4

[21] Hamnett A. Introduction to fuel-cell types. In: John Wiley & Sons, editor. Handbook of Fuel Cells–Fundamentals, Technology and Applications. Hoboken, New Jersey, U.S.: John Wiley & Sons; 2010

[22] Lan R, Tao S. Ammonia as a suitable fuel for fuel cells. Frontiers in Energy Research. 2014;**2**:1-4. DOI: 10.3389/fenrg.2014.00035

[23] Wan CH, Lin CH. A composite anode with reactive methanol filter for direct methanol fuel cell. Journal of Power Sources. 2009;**186**:229-237. DOI: 10.1016/j.jpowsour.2008.10.116

[24] Nakagawa N, Sekimoto K, Masdar MS, Noda R. Reaction analysis of a direct methanol fuel cell employing a porous carbon plate operated at high methanol concentrations. Journal of Power Sources. 2009;**186**:45-51. DOI: 10.1016/j.jpowsour.2008.09.117

[25] Han J, Liu H. Real time measurements of methanol crossover in a DMFC. Journal of Power Sources. 2007;**164**:166-173. DOI: 10.1016/j.jpowsour.2006.09.105

[26] Xu C, Faghri A, Li X, Ward T. Methanol and water crossover in a passive liquid-feed direct methanol fuel cell. International Journal of Hydrogen Energy. 2010;**35**:1769-1777. DOI: 10.1016/j.ijhydene.2009.12.055

[27] Scott K. Mass transfer in flow field. In: Vielstich W, Lamm A, Gasteiger HA, editors. Handbook of Fuel Cells–Fundamentals, Technology and

Applications. Hoboken, New Jersey, U.S: John Wiley & Sons; 2010

[28] Aric AS, Baglio V, Antonucci V. Direct methanol fuel cells: History, status and perspectives. In: Electrocatalysis of Direct Methanol Fuel Cells. Weinheim, Germany: Wiley-VCH Verlag GmbH & Co. KGaA; 2009. pp. 1-78. DOI: 10.1002/9783527627707.ch1

[29] Ramli ZAC, Kamarudin SK. Platinum-based catalysts on various carbon supports and conducting polymers for direct methanol fuel cell applications: A review. Nanoscale Research Letters. 2018;**13**:410. DOI: 10.1186/s11671-018-2799-4

[30] Qin C, Tian S, Wang W, Jiang ZJ, Jiang Z, Jovanovic P, et al. Advances in platinum-based and platinum-free oxygen reduction reaction catalysts for cathodes in direct methanol fuel cells. Frontiers in Chemistry. 2022;**10**:851-859. DOI: 10.3389/fchem.2022.1073566

[31] Arikan T, Kannan AM, Kadirgan F. Binary Pt–Pd and ternary Pt–Pd–Ru nanoelectrocatalysts for direct methanol fuel cells. International Journal of Hydrogen Energy. 2013;**38**:2900-2907. DOI: 10.1016/j.ijhydene.2012.12.052

[32] Feng L, Li K, Chang J, Liu C, Xing W. Nanostructured PtRu/C catalyst promoted by CoP as an efficient and robust anode catalyst in direct methanol fuel cells. Nano Energy. 2015;**15**:462-469. DOI: 10.1016/j.nanoen.2015.05.007

[33] Khotseng L, Bangisa A, Modibedi RM, Linkov V. Electrochemical evaluation of Pt-based binary catalysts on various supports for the direct methanol fuel cell. Electrocatalysis. 2016; **7**:1-12. DOI: 10.1007/s12678-015-0282-x

[34] Long Quan D, Huu Le P. Recent advances in Pt-based binary and ternary alloy electrocatalysts for direct methanol fuel cells. In: Electrocatalysis and Electrocatalysts for a Cleaner Environment-Fundamentals and Applications. London, UK: IntechOpen; 2022. DOI: 10.5772/intechopen.95940

[35] Jayakumar A, Madheswaran DK, Kumar NM. A critical assessment on functional attributes and degradation mechanism of membrane electrode assembly components in direct methanol fuel cells. Sustainability. 2021;**13**:13938. DOI: 10.3390/su132413938

[36] Jovanovič P, Šelih VS, Šala M, Hočevar S, Ruiz-Zepeda F, Hodnik N, et al. Potentiodynamic dissolution study of PtRu/C electrocatalyst in the presence of methanol. Electrochimica Acta. 2016; **211**:851-859. DOI: 10.1016/j.electacta.2016.06.109

[37] Thompsett D. Pt alloys as oxygen reduction catalysts. In: Vielstich W, Lamm A, Gasteiger HA, editors. Handbook of Fuel Cells–Fundamentals, Technology and Applications. Hoboken, New Jersey, U.S: John Wiley & Sons; 2010

[38] Suermann M, Bensmann B, Hanke-Rauschenbach R. Degradation of proton exchange membrane (PEM) water electrolysis cells: Looking beyond the cell voltage increase. Journal of the Electrochemical Society. 2019;**166**: F645-F652. DOI: 10.1149/2.1451910jes

[39] Iulianelli A, Basile A. Sulfonated PEEK-based polymers in PEMFC and DMFC applications: A review. International Journal of Hydrogen Energy. 2012;**37**:15241-15255. DOI: 10.1016/j.ijhydene.2012.07.063

[40] Li L. Sulfonated poly (ether ether ketone) membranes for direct methanol fuel cell. Journal of Membrane Science. 2003;**226**:159-167. DOI: 10.1016/j.memsci.2003.08.018

[41] Yuda A, Ashok A, Kumar A. A comprehensive and critical review on recent progress in anode catalyst for methanol oxidation reaction. Catalysis Reviews. 2022;**64**:126-228. DOI: 10.1080/01614940.2020.1802811

[42] Zhang Z, Liu J, Wang J, Wang Q, Wang Y, Wang K, et al. Single-atom catalyst for high-performance methanol oxidation. Nature Communications. 2021;**12**:1-9. DOI: 10.1038/s41467-021-25562-y

[43] Shrivastava NK, Thombre SB, Chadge RB. Liquid feed passive direct methanol fuel cell: Challenges and recent advances. Ionics. 2016;**22**:1-23. DOI: 10.1007/s11581-015-1589-6

[44] Sgroi M, Zedde F, Barbera O, Stassi A, Sebastián D, Lufrano F, et al. Cost analysis of direct methanol fuel cell stacks for mass production. Energies. 2016;**9**:1008. DOI: 10.3390/en9121008

[45] Willert A, Tabary FZ, Zubkova T, Santangelo PE, Romagnoli M, Baumann RR. Multilayer additive manufacturing of catalyst-coated membranes for polymer electrolyte membrane fuel cells by inkjet printing. International Journal of Hydrogen Energy. 2022;**47**:20973-20986. DOI: 10.1016/j.ijhydene.2022.04.197

[46] Mauger SA, Neyerlin KC, Yang-Neyerlin AC, More KL, Ulsh M. Gravure coating for roll-to-roll manufacturing of proton-exchange-membrane fuel cell catalyst layers. Journal of the Electrochemical Society. 2018;**165**: F1012-F1018. DOI: 10.1149/2.0091813jes

[47] Stähler M, Stähler A, Scheepers F, Carmo M, Stolten D. A completely slot die coated membrane electrode assembly. International Journal of Hydrogen Energy. 2019;**44**:7053-7058. DOI: 10.1016/j.ijhydene.2019.02.016

[48] Santangelo P, Cannio M, Romagnoli M. Review of catalyst-deposition techniques for PEMFC electrodes. TECNICA ITALIANA-Italian Journal of Engineering Science. 2019;**63**:65-72. DOI: 10.18280/ti-ijes.630109

[49] Toudret P, Blachot JF, Heitzmann M, Jacques PA. Impact of the cathode layer printing process on the performance of MEA integrating PGM free catalyst. Catalysts. 2021;**11**:669. DOI: 10.3390/catal11060669

[50] Roncaglia F, Mucci A, Romagnoli M, Spinelli L, di Bona A, Biagi R. Graphite-epoxy composites for bipolar plates: The gas permeability issue. International Journal of Hydrogen Energy. 2023;**48**: 20935-20944. DOI: 10.1016/j.ijhydene.2022.12.311

[51] Edlund D. Methanol Fuel Cell Systems: Advancing Towards Commercialization. Singapore: Pan Stanford Publishing Pte. Ltd; 2011. pp. 159-160

[52] SFC Energy. Direct Methanol Fuel Cell (DMFC). 2023. Available from: https://www.sfc.com/en/technology/direct-methanol/

[53] Mergel J, Janßen H, Müller M, Wilhelm J, Stolten D. Development of direct methanol fuel cell systems for material handling applications. Journal of Fuel Cell Science and Technology. 2012;**9**(3):031011. DOI: 10.1115/1.4006490

[54] Ramsden T. Direct Methanol Fuel Cell Material Handling Equipment Demonstration. Annual Progress Report, DOE Hydrogen and Fuel Cells Program; 2011. pp. 1209-1211

[55] Metzger N, Li X. Technical and economic analysis of fuel cells for forklift applications. ACS Omega. 26 May 2022;**7**(22):18267-18275

[56] Muller J. Field experience with portable DMFC products. In: Vielstich W, Lamm A, Gasteiger HA, editors. Handbook of Fuel Cells–Fundamentals, Technology and Applications. John Wiley & Sons; 2010

[57] Efoy Pro. DMFC Power Generator. Hoboken, New Jersey, U.S: John Wiley & Sons; 2023. Available from: https://www.efoy-pro.com/en/efoy/efoy-pro-12000-duo/

[58] Blue World Technologies. DMFC Power Generator. 2023. Available from: https://www.blue.world/

[59] Kimiaie N, Wedlich K, Hehemann M, Lambertz R, Müller M, Korte C, et al. Results of a 20 000 h lifetime test of a 7 kW direct methanol fuel cell (DMFC) hybrid system–degradation of the DMFC stack and the energy storage. Energy & Environmental Science. 2014;7:3013-3025. DOI: 10.1039/C4EE00749B

[60] Oorja Protonics Inc. Direct Methanol Fuel Cells. 2016. Available from: https://www.methanol.org/wp-content/uploads/2016/06/Oorja-Corporate-Presentation-_4_27_16.pdf

[61] Material Handling Power. 2023. Available from: https://www.gaoncell.com/solution/fc/fc-dm1500

[62] Blue World Technologies. Market Applications. 2023. Available from: https://www.blue.world/markets/automotive

[63] Hogarth M. Prospects of the direct methanol fuel cell. In: Hoogers G, editor. Fuel Cell Technology Handbook. Boca Raton, Florida: CRC Press; 2002

[64] Zhao X, Yin M, Ma L, Liang L, Liu C, Liao J, et al. Recent advances in catalysts for direct methanol fuel cells. Energy and Environmental Science. 2011;**4**: 2736-2753. DOI: 10.1039/c1ee01307f

[65] Das S, Pérez-Ramírez J, Gong J, Dewangan N, Hidajat K, Gates BC, et al. Core-shell structured catalysts for thermocatalytic, photocatalytic, and electrocatalytic conversion of CO_2. Chemical Society Reviews. 2020;**49**: 2937-3004. DOI: 10.1039/c9cs00713j

[66] Direct Methanol Fuel Cell Market Size & Share Analysis-Growth Trends & Forecasts (2023–2028). 2023. Available from: https://www.mordorintelligence.com/industry-reports/global-direct-methanol-fuel-cells-market-industry

[67] Direct Methanol Fuel Cell Market Size, Share & Trends Analysis Report by Application, Regional Outlook, Competitive Strategies, and Segment Forecasts, 2019 to 2025. 2023. Available from: https://www.grandviewresearch.com/industry-analysis/direct-methanol-fuel-cell-market

[68] Methanol Institute. Renewable Methanol. 2023. Available from: https://www.methanol.org/renewable/